WARNING

THE FOLLOWING SERVICING INSTRUCTIONS ARE FOR USE BY QUALIFIED PERSONNEL ONLY. TO AVOID PERSONAL INJURY, DO NOT PERFORM ANY SERVICING OTHER THAN THAT CONTAINED IN OPERATING INSTRUCTIONS UNLESS YOU ARE QUALIFIED TO DO SO.

TEKTRONIX®

7613/R7613
STORAGE OSCILLOSCOPE SERVICE

INSTRUCTION MANUAL

Tektronix, Inc.
P.O. Box 500
Beaverton, Oregon 97077

Serial Number _____

070-1463-01

First Printing SEP 1972

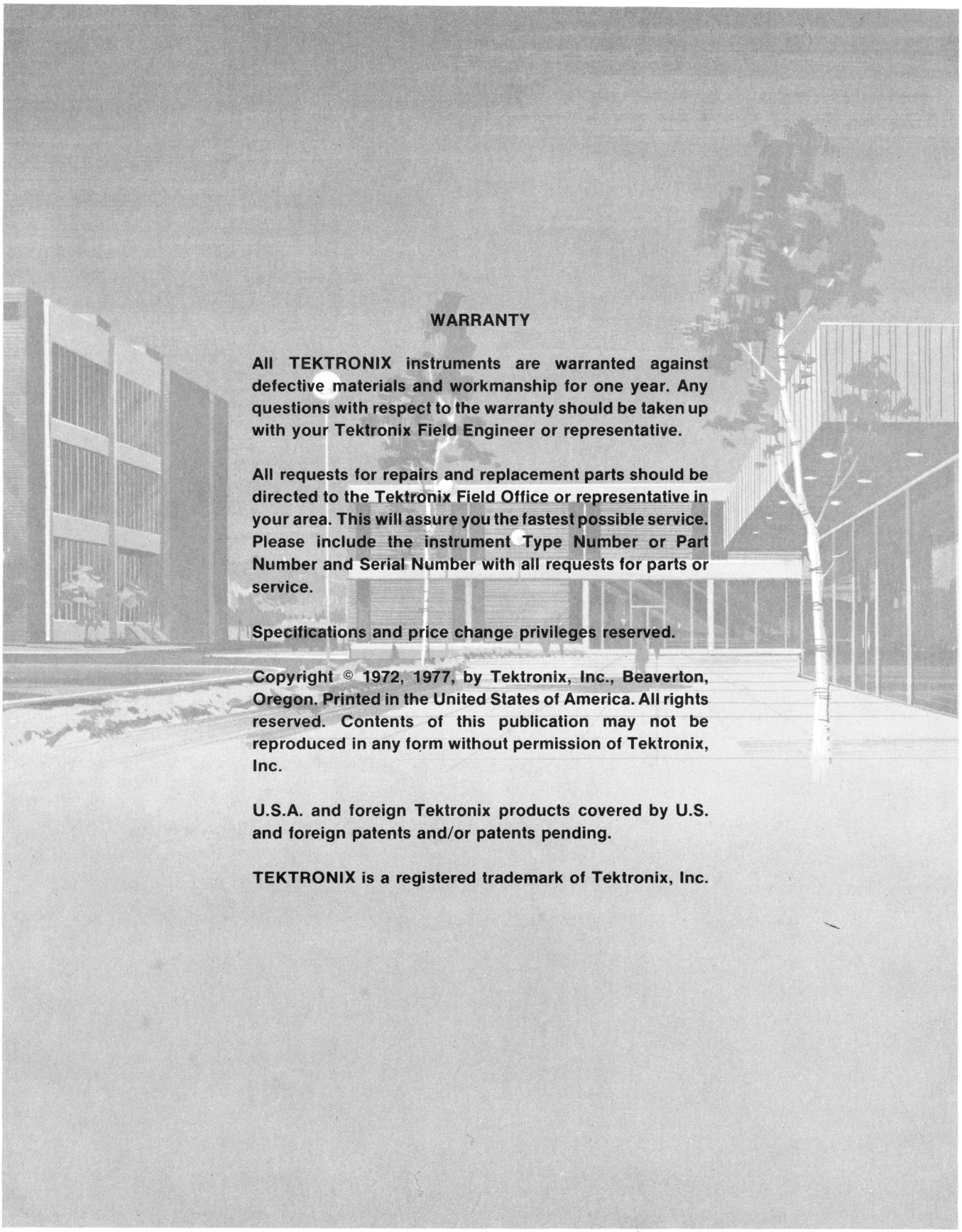

WARRANTY

All TEKTRONIX instruments are warranted against defective materials and workmanship for one year. Any questions with respect to the warranty should be taken up with your Tektronix Field Engineer or representative.

All requests for repairs and replacement parts should be directed to the Tektronix Field Office or representative in your area. This will assure you the fastest possible service. Please include the instrument Type Number or Part Number and Serial Number with all requests for parts or service.

Specifications and price change privileges reserved.

Copyright © 1972, 1977, by Tektronix, Inc., Beaverton, Oregon. Printed in the United States of America. All rights reserved. Contents of this publication may not be reproduced in any form without permission of Tektronix, Inc.

U.S.A. and foreign Tektronix products covered by U.S. and foreign patents and/or patents pending.

TEKTRONIX is a registered trademark of Tektronix, Inc.

TABLE OF CONTENTS

SECTION 1 OPERATING INFORMATION **Page**

Operating Set-Up Information 1-1
Display Modes 1-1
Stored Displays 1-1
Care of Storage Screen 1-1
Beam Finder 1-1
Function of Controls and Connectors 1-2

SECTION 2 CALIBRATION

Test Equipment Required 2-1
Set-Up Procedure 2-4
Preliminary Control Settings . . . 2-4
Index to Calibration Procedure . 2-4
Power Supply 2-5
Display and Z-Axis 2-6
Vertical Deflection System (For Instruments SN B150000-Above) . 2-10
Vertical Deflection System (For Instruments SN B149999-Below) . 2-12
Horizontal Deflection System 2-16
Calibrator 2-18
Check Signals Function 2-19
Readout Operation (Option 1 deletes this procedure) 2-20
Storage System 2-21

SECTION 3 CIRCUIT DESCRIPTION

Block Diagram 3-1
Circuit Operation 3-1
Logic Fundamentals 3-3
Main Interface 3-6
Logic Circuit 3-6
Trigger Selector 3-16
Vertical Interface (For Instruments SN B150000-Above) 3-19
Vertical Interface (For Instruments SN B149999-Below) 3-21

SECTION 3 CIRCUIT DESCRIPTION (cont) **Page**

Vertical Amplifier (For Instruments SN B150000-Above) 3-22
Vertical Amplifier (For Instruments SN B149999-Below) 3-24
Horizontal Amplifier 3-24
Calibrator and Front Panel Switching 3-26
CRT Circuit 3-27
Low-Voltage Power Supply 3-30
Signal Out Board 3-34
Readout System 3-34
Storage Board Circuitry 3-54
Variable Persistence and Save Circuitry 3-54
Erase Timing Generator 3-55
Storage Target Backplate Amplifier 3-55

SECTION 4 MAINTENANCE

Preventive Maintenance 4-1
Troubleshooting 4-2
Location of Circuit Boards 4-4
Electrode Configuration for Semiconductors 4-7
Circuit Isolation Troubleshooting Chart 4-9
Corrective Maintenance 4-10
Soldering Techniques 4-11
Component Replacement 4-11
Recalibration After Repair 4-16
Instrument Repackaging 4-17

SECTION 5 ELECTRICAL PARTS LIST

OPTIONS

SECTION 6 DIAGRAMS AND CIRCUIT BOARD ILLUSTRATIONS

SECTION 7 MECHANICAL PARTS LIST

CHANGE INFORMATION

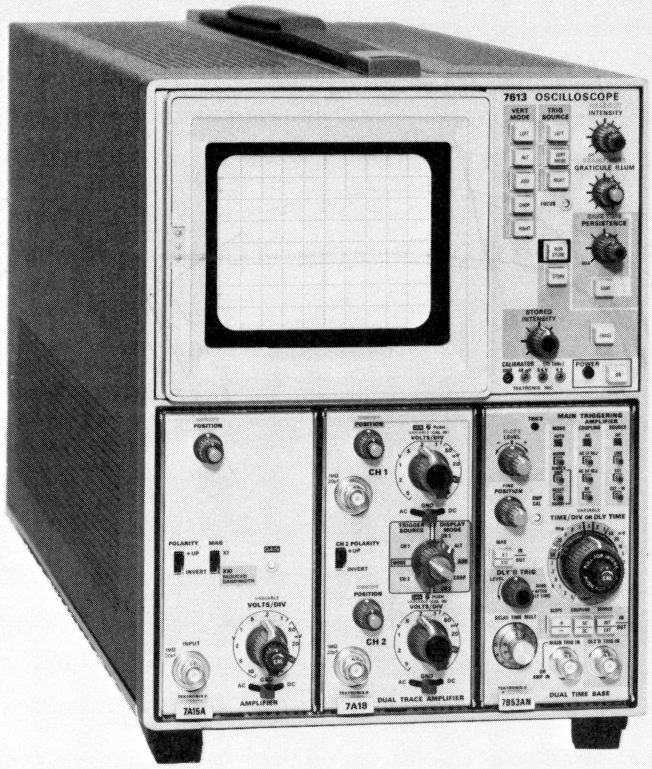

The TEKTRONIX 7613 Storage Oscilloscope is a solid-state, light-weight instrument designed for general purpose applications. This instrument has three plug-in compartments that accept TEKTRONIX 7000-Series plug-in units to form a complete measurement system. The two plug-in compartments on the left are for vertical preamplifiers. The right plug-in compartment is connected to the horizontal deflection system. Electronic switching is used to connect either vertical plug-in to the vertical deflection system. It is possible to alternately display the vertical signals (multi-trace display). The flexibility of this plug-in feature and variety of plug-in units available allow this system to be used for many measurement applications.

This instrument features a large screen, 8 X 10 division display; each division equals 0.9 centimeter. The Cathode ray tube (CRT) provides small spot size and a fast storage writing speed. Storage operation uses a variable Persistence mode and a Save mode. The variable Persistence mode electrically controls the retention of the CRT. The Save mode provides longer retention of the stored display, and a lockout function to prevent accidental erasure of the stored display.

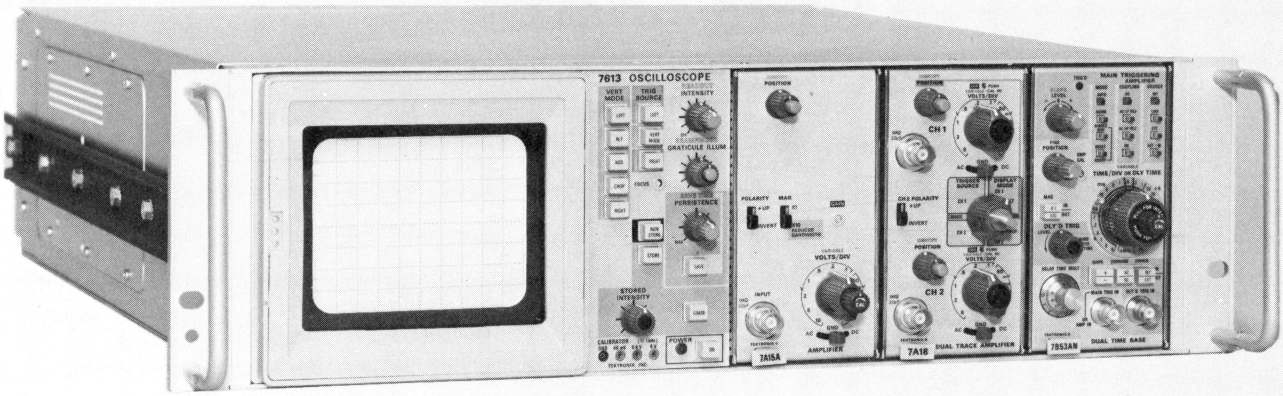

1365-03

OPERATING INFORMATION

The 7613/R7613 can be operated from either a 110-volt or a 220-volt line source. In addition, three operating ranges can be selected by a jumper located on the Rectifier board. Select a range which is centered about the average line voltage to which the instrument is connected. Refer to Fig. 1-1 in Operators manual for location of voltage selector jumper.

See Table 1-1 for ranges and proper fuses.

TABLE 1-1

Regulating Range and Fuse Data

Pins Selected	Regulating Range	
	110-volt nominal	220-volt nominal
LOW	90 to 110 volts	180 to 220 volts
MED	99 to 121 volts	198 to 242 volts
HI	108 to 132 volts	218 to 262 volts
Line fuse	3.2 A slow-blow	1.6 A slow-blow

The 7613 can be operated where the ambient air temperature is between 0° and +50°C. The instrument is cooled by forced air. Adequate clearance must be provided on back and bottom of the instrument. The R7613 is cooled by forced air. Adequate clearance must be provided behind the air filter and on the right side. A thermal cutout in the instrument provides thermal protection by interrupting the power to the instrument if the internal temperature exceeds a safe operating level.

Operating Set-Up Information

INTENSITY	Midrange
READOUT	Midrange
FOCUS	Well defined display
STORED INTENSITY	Midrange
PERSISTENCE	Midrange
SAVE TIME	Clockwise
STORE	Out (release)
SAVE	Out (release)
NON-STORE	In (pressed in)
VERT MODE	LEFT (pressed in)
TRIG SOURCE	VERT MODE
GRATICULE ILLUM	As desired
POWER	On (pulled out)

Display Modes

Install two vertical plug-in units into the vertical compartments. Set the deflection factor for two volts/division. Connect the 4 V calibrator signal to both vertical plug-in units. Use a pin jack to BNC connector and a dual input coupler connector. Install a time-base plug-in unit in the horizontal compartment. Set the time/division switch to 0.5 millisecond/division, and adjust the trigger level for a stable display. The left vertical signal is displayed.

Press the RIGHT button of the VERT MODE switch. The display should be stable for either vertical unit selected.

Press the ALT button of the VERT MODE switch. Adjust the position controls of each vertical unit so that two displays are present on the CRT screen. One vertical signal is displayed per sweep and the other vertical signal is displayed at the next sweep. This is a dual trace mode.

Press the CHOP button of the VERT MODE switch. A dual trace will be displayed on the CRT screen. Each vertical signal is displayed during the sweep, on a time-sharing basis.

Press the ADD button of the VERT MODE switch. The display is the algebraic sum of both vertical signals.

Stored Displays

Obtain a display by following the instructions under OPERATING SET-UP INFORMATION and Display Modes.

Press the STORE button, the instrument is in the variable persistence mode. Change the vertical position, and note that the stored display will fade out and the new position will be stored. The time that a display is stored on the screen of the CRT is controlled by the PERSISTENCE control (clockwise decreases the retention).

Press the SAVE button. All functions are locked out except the SAVE TIME control and the STORED INTENSITY control. The STORED INTENSITY controls the brightness of the stored display. The SAVE TIME controls the length of time that a display is stored. When the SAVE TIME control is at MAX and in the switch detent (minimum intensity) the display is not visible. Turning the SAVE TIME control clockwise will make the stored display visible, but will reduce the storage time. While in the MAX save mode, the stored information will remain stored for long periods of time even with the power turned off. Turn the instrument on, and adjust the SAVE TIME control setting for a visible display.

Care of Storage Screen

1. Use minimum beam intensity to produce a clear well defined display.

2. Avoid repeated use of the same area of the CRT.

3. Do not leave a stored display on the screen when it is no longer needed.

4. Use MAX SAVE when storing a display for extended periods of time (minimum intensity).

5. Operate in the NON-STORE mode unless storage is required.

Beam Finder

The BEAM FINDER switch provides a means of locating a display which overscans the viewing area.

Press and hold the BEAM FINDER switch in. Increase the vertical and horizontal deflection factors until the display is reduced to about two divisions, and adjust the horizontal and vertical position control settings to center the display. Release the switch for normal operation.

For more detailed operating instructions see the 7613/R7613 Operators Manual.

FUNCTIONS OF CONTROLS AND CONNECTORS

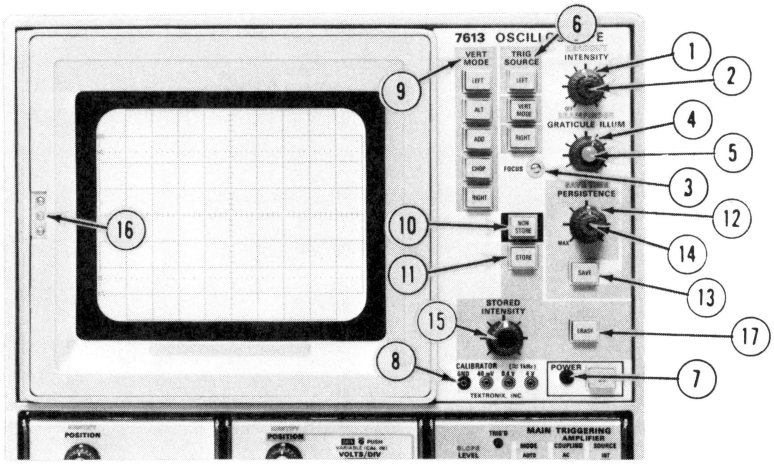

1. INTENSITY—Controls brightness of the display. Control is inoperative when horizontal compartment is vacant.

2. READOUT—Turns on the readout display and controls the readout intensity.

3. FOCUS—Provides adjustment for optimum display definition.

4. GRATICULE ILLUM—Controls graticule illumination.

5. BEAM FINDER—When pressed, the display is limited within the graticule area.

6. TRIG SOURCE—Selects source of internal trigger signal for the time base plug-in in the horizontal compartment.

   LEFT: The trigger signal is obtained from the plug-in unit in the left vertical compartment only.

   VERT MODE: Trigger signal automatically follows the vertical display except in CHOP and ADD; then the trigger signal is the algebraic sum of the signals from the left and right vertical compartments.

   RIGHT: The trigger signal is obtained from the plug-in unit in the right vertical compartment only.

7. POWER—Switch controls the power to the instrument. Light indicates that the power switch is on and that the instrument is connected to a line voltage source.

8. CALIBRATOR—Calibrator output pin jacks (4 V, 0.4 V, 40 mV, and ground). Positive-going pulse or DC voltage selected by changing internal jumper.

9. VERT MODE—Selects vertical mode of operation.

   LEFT: Signals from plug-in unit in left vertical compartment are displayed.

   ALT: Signals from both plug-in units in both the left and right vertical compartments are displayed (dual trace). Display switches between vertical plug-in units after each sweep.

   ADD: Signals from plug-in units in both the left and right vertical compartments are algebraically added and the sum is displayed on the CRT.

   CHOP: Signals from plug-in units in both the left and right vertical compartments are displayed (dual trace). The display is switched between vertical plug-in units at approximately a one megahertz rate.

   RIGHT: Signals from plug-in unit in right vertical compartment is displayed.

10. NON-STORE—Selects non-store operation.

11. STORE—Selects storage operation.

12. PERSISTENCE—Controls the retention of the stored display.

13. SAVE—Prevents accidental erasure, and additional storage of information.

14. SAVE TIME—Used with the SAVE mode for extending retention. When in the MAX detent there is no visible stored display in all storage modes.

15. STORED INTENSITY—Select writing speed and view time combination controls (brightness of stored display).

16. Camera Power (Not Labeled)—Three-pin connector on CRT bezel provides power output (+15 V). Receives remote single sweep reset signal from compatible camera systems, and a ground pin connection.

17. ERASE—Erases stored display.

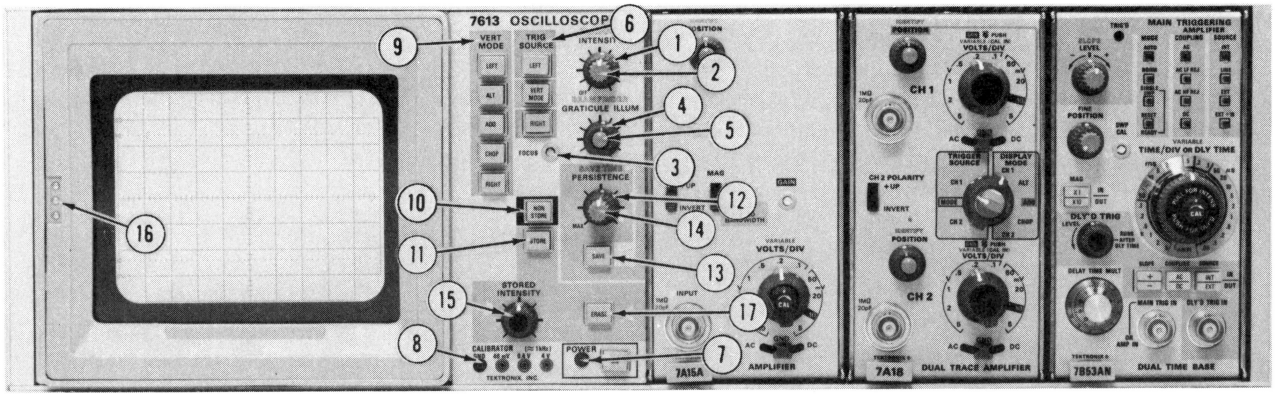

Fig. 1-1. Front-panel controls and connectors.

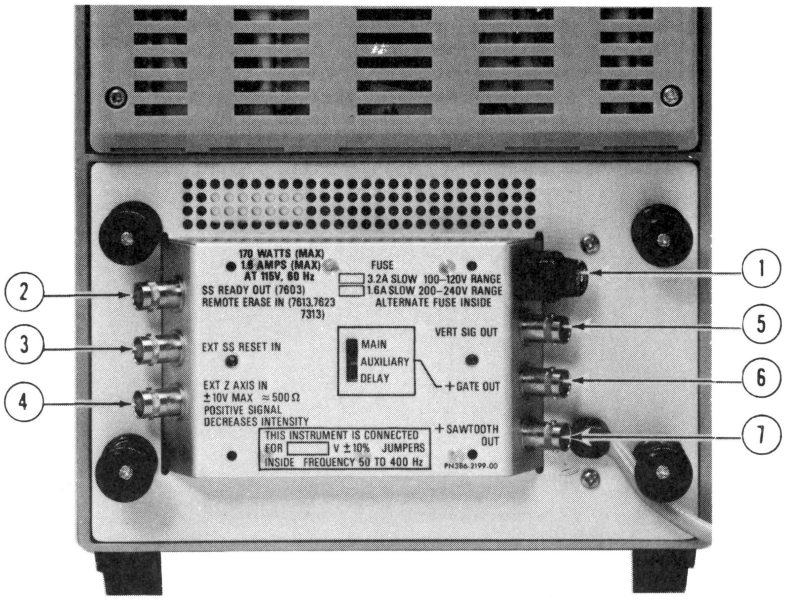

1. FUSE—Line voltage fuse.

2. REMOTE ERASE IN—Provides external connection for remote erase.

3. EXT S S RESET IN—Remote single sweep reset.

4. EXT Z AXIS IN—Input for intensity modulation of the CRT display.

5. VERT SIG OUT—Vertical signal selected by TRIG SOURCE switch (LEFT, RIGHT, ALT and ADD).

6. +GATE OUT—Gate signal selected by gate selector switch (Main, Auxiliary, and Delay).

7. +SAWTOOTH OUT—Positive-going sawtooth from time-base unit.

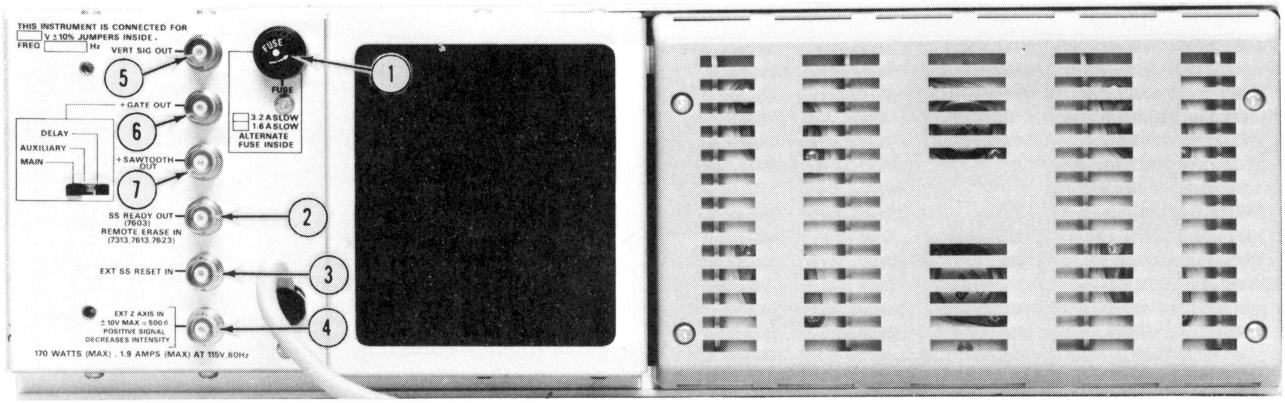

Fig. 1-2. Rear-panel controls and connectors.

CALIBRATION

Calibration Interval

To assure instrument accuracy, check the calibration of the 7613 every 1000 hours of operation, or every six months if used infrequently. Before complete calibration, thoroughly clean and inspect this instrument as outlined in the Maintenance section.

TEKTRONIX Field Service

Tektronix, Inc. provides complete instrument repair and recalibration at local Field Service Centers and the Factory Service Center. Contact your local TEKTRONIX Field Office or representative for further information.

Using This Procedure

General. This section provides several features to facilitate calibration of the 7613. These are:

Index. An index is given preceding the calibration procedure to aid in locating a step.

Partial Procedure. A partial calibration is often desirable after replacing components, or to touch up the adjustment of a portion of the instrument between major recalibrations. To calibrate only part of the instrument, set the controls as given under Preliminary Control Settings and start with the nearest Equipment Required list preceding the desired portion. To prevent unnecessary recalibration of other parts of the instrument, re-adjust only if the tolerance given in the Check part of the step is not met. If re-adjustment is necessary, also check the calibration of any steps listed in the Interaction part of the step.

Complete Calibration Procedure. Completion of each step in the following calibration procedure insures that this instrument is both correctly adjusted and performing within all given tolerances.

NOTE

All waveforms shown in this section were taken with a TEKTRONIX Oscilloscope Camera System, unless noted otherwise.

TEST EQUIPMENT REQUIRED

General

The test equipment and accessories, or its equivalent, given in the Test Equipment table is required for complete calibration of the 7613. Specifications given for the test equipment are the minimum necessary for accurate calibration. Therefore, the specifications of any test equipment used must meet or exceed the listed specifications. All test equipment is assumed to be correctly calibrated and operating within the listed specification. Detailed operating instructions for the test equipment are not given in this procedure. Refer to the instruction manual for the test equipment if more information is needed.

Special Calibration Fixtures

Special TEKTRONIX calibration fixtures are used in this procedure only where they facilitate instrument calibration. These special calibration fixtures are available from Tektronix, Inc. Order by part number through your local TEKTRONIX Field Office or representative.

Calibration Equipment Alternatives

All of the listed test equipment is required to completely check and adjust this instrument. This Calibration procedure is based on the first item of equipment given as an example of applicable equipment. When other equipment is substituted, control settings or calibration setup may need to be altered slightly to meet the requirements of the substitute equipment. If the exact item of test equipment given as an example in the Test Equipment table is not available, first check the Specifications column carefully to see if any other equipment is available which might suffice. Then check the Usage column to see what this item of test equipment is used for. If used for a check or adjustment which is of little or no importance to your measurement requirements, the item and corresponding step(s) can be deleted.

The following procedure is written to completely check and adjust the 7613 to the limits given in Section 2 of the Operators Manual and to allow interchanging 7000-series plug-in units between 7000-series mainframes without the need to recalibrate the instruments each time. If the applications for which you will use the 7613 do not require the full available performance from the 7613/plug-in combination, this procedure and the required equipment list can be shortened accordingly. For example, the basic measurement capabilities of this instrument can be verified by checking vertical deflection accuracy, vertical square-wave response, and basic horizontal timing with 7000-series real-time plug-in units and an accurate square wave signal. Also, if the 7613/plug-in combination is to be used as a fixed system without the need to interchange plug-in units, all tests can be made by substituting vertical plug-in units and applicable test signals for the 067-0587-01 Calibration Fixture.

TEST EQUIPMENT

Description	Minimum Specifications	Usage	Examples of Applicable Test Equipment
1. Precision dc voltmeter	Range, 0 to 150 volts; accuracy, within 0.1%.	Calibrator output accuracy check and adjustment. Low-voltage power supply adjustment.	a. TEKTRONIX DM 501 Digital Multimeter.[a] b. Fluke Model 825A Differential DC Voltmeter.
2. DC voltmeter (VOM)	Range, 0 to 4000 volts; accuracy, checked to within 1% at −1500 volts.	High-voltage power supply check. Z-axis dc levels adjustment.	a. Triplett Model 640-NA. b. Simpson Model 262.
3. Time-mark generator	Marker outputs, 10 ns to 0.1 s; marker accuracy, within 0.1%. Trigger output, 1 ms.	Crt geometry check and adjustment. Horizontal timing check and adjustment.	a. TEKTRONIX TG 501 Time-Mark Generator.[a] b. TEKTRONIX 2901 Time-Mark Generator.
4. High-frequency constant amplitude signal generator	Frequency, 65 to above 190 MHz; amplitude accuracy, within 1% of reference as output frequency changes.	Vertical bandwidth check. Vertical amplifier isolation check.	Wavetek 1002 Sweep/Signal Generator.
5. Medium-frequency constant-amplitude signal generator.	Frequency, 50 to 70 MHz; reference frequency, 50 kHz; output amplitude, variable from 5 mV to 5V peak to peak into 50 ohms; amplitude accuracy, constant within 3% of reference as output frequency changes.	External Z-axis operation check. Vertical bandwidth check. Vertical amplifier isolation check. Horizontal bandwidth check.	a. TEKTRONIX SG 503 Signal Generator.[a] b. TEKTRONIX 191 Constant Amplitude Signal Generator. c. General Radio 1215-C with 1263-C Amplitude Regulating Power Supply.
6. Low-frequency signal generator	Frequency, 35 kHz; output amplitude, variable from 50 to 100 mV.	X-Y phase shift check.	a. TEKTRONIX FG 501 Function Generator.[1] b. General Radio 1310-B Oscillator.
7. Test oscilloscope	Bandwidth, dc to 50 MHz; minimum deflection factor, 10 mV/div; accuracy, within 3%.	Horizontal limit centering adjustment and +GATE OUT.	a. TEKTRONIX 7603 Oscilloscope with two 7A15A or 7A16 Amplifier and 7B53A Time Base plug-in units, and two P6105 Probes.
8. Vertical plug-in unit (two indentical units required), and a dual display vertical unit	TEKTRONIX 7A-series 65 MHz bandwidth required for complete procedure as written.	Used throughout procedure to provide vertical input to 7613 under calibration. The 7A18 is used to check READOUT operation.	a. TEKTRONIX 7A15A and a 7A18 Amplifier (may be shared with 7000-series test oscilloscope). b. Any 7A-series plug-in unit (tolerances in some steps may be limited if low-frequency units used).

[a]Requires TM 500-Series Power Module.

TEST EQUIPMENT (cont)

Description	Minimum Specifications	Usage	Examples of Applicable Test Equipment
9. Time base plug-in unit	TEKTRONIX 7B-series.	Used through procedure to provide sweep.	a. TEKTRONIX 7B53A Time Base.
10. Calibration Fixture (signal standardizer)	Produces gain-check and pulse-response waveforms.	Used throughout procedure to standardize instrument so plug-in units can be interchanged without complete recalibration.	a. TEKTRONIX Calibration Fixture 067-0587-01. b. Calibrated 7000-series plug-in units with suitable signal sources may be substituted if lower performance is acceptable.
11. 10X passive probe	Compatible with 7B-series external trigger input.	Chopped mode operation check (adjustment procedure).	a. TEKTRONIX P6105 Probe (may be shared with test oscilloscope).
12. Tee connector	Connectors, bnc.	External Z-axis operation check.	a. Tektronix Part No. 103-0030-00.
13. Termination	Impedance, 50 ohms; accuracy, ±2%; connectors, bnc.	Horizontal timing check and adjustment. X-Y phase shift check.	a. Tektronix Part No. 011-0049-01.
14. Dual-input coupler	Connectors, bnc.	Added operation check. X-Y phase shift check.	a. Tektronix Calibration Fixture 067-0525-01.
15. Cable (two required)	Impedance, 50 ohms; type, RG-58/U; length, 18 and 42 inches; connectors, bnc.	Used throughout procedure for signal interconnection.	a. Tektronix Part No. 012-0076-00 (18-inch). Tektronix Part No. 012-0057-01 (42-inch).
16. GR in-line termination	Impedance, 50 ohms; accuracy, ±2%; connectors, GR874 input with bnc male output.	External Z-axis operation check. Vertical bandwidth check. Vertical amplifier isolation check. Horizontal bandwidth check.	a. Tektronix Part No. 017-0083-00.
17. Cable	Impedance, 50 ohms; type RG-213/U; electrical length, 5 ns; connectors, GR874.	External Z-axis operation check. Vertical bandwidth check. Vertical amplifier isolation check. Horizontal bandwidth check.	a. Tektronix Part No. 017-0502-00.
18. BNC to pin-jack cable	Adapts pin jacks to bnc male connector.	Added operation check. Trigger source operation check. Astigmatism adjustment.	a. Tektronix Part No. 175-1178-00 (one supplied as standard accessory).
19. Screwdriver	Three-inch shaft, 3/32-inch bit.	Used throughout adjustment procedure to adjust variable resistors.	a. Xcelite R-3323.
20. Low-capacitance screwdriver	1 1/2-inch shaft.	Used throughout adjustment procedure to adjust variable capacitors.	a. Tektronix Part No. 003-0000-00.

SET-UP PROCEDURE

NOTE

This instrument should be adjusted at an ambient temperature of +25°C ±5°C for best overall accuracy.

1. Remove the side covers from the 7613 or the top cover and side panel from the R7613.

2. Connect the instrument to a power source which meets the voltage and frequency requirements. The applied voltage should be near the center of the voltage range marked on the rear panel (see Section 1 for information on converting this instrument from one operating voltage to another).

NOTE

If correct line voltage is not available, use a variable autotransformer to provide the correct input voltage.

3. Set the controls as given under Preliminary Control Settings. Allow at least 20 minutes warmup before proceeding.

NOTE

Titles for external controls of this instrument are capitalized in this procedure (e.g., INTENSITY). Internal adjustments are initial capitalized only (e.g., CRT Grid Bias).

Preliminary Control Settings

Set the 7613 controls as follows:

READOUT	Counterclockwise (in detent)
FOCUS	Adjust for well-defined display
BEAM FINDER	Out
GRATICULE ILLUM	As desired
VERT MODE	LEFT
TRIG SOURCE	VERT MODE
NON STORE	IN
POWER	ON
PERSISTENCE	MAX
STORED INTENSITY	Counterclockwise
SAVE	Out
SAVETIME	Counterclockwise (not in detent)

Introduction

The following procedure returns the 7613 to correct calibration. All limits and tolerances given in this procedure are calibration guides, and should not be interpreted as instrument specifications except as listed in Section 2 of the Operators Manual.

Index to Calibration Procedure

Power Supply

1. Adjust −50 Volt Power Supply — Page 2-5
2. Check Remaining Power-Supply Voltages — Page 2-5
3. Check High-Voltage Power Supply — Page 2-6

Display and Z-Axis

4. Adjust CRT Grid Bias — Page 2-6
5. Check Z-Axis DC Levels — Page 2-7
6. Adjust Auto Focus Compensation — Page 2-8
7. Adjust Trace Rotation — Page 2-8
8. Adjust Y-Axis Alignment — Page 2-8
9. Adjust Geometry — Page 2-9
10. Check External Z-Axis Operation — Page 2-9

Vertical Deflection System (For Instruments SN B150000-Above)

11. Adjust Vertical Centering — Page 2-10
12. Check Vertical Gain — Page 2-10
13. Adjust Thermal Balance — Page 2-11
14. Check Vertical Linearity — Page 2-11
15. Adjust Vertical High-Frequency Compensation — Page 2-11

Vertical Deflection System (For Instruments SN B149999-Below)

16. Adjust Bias — Page 2-13
17. Adjust Vertical Centering — Page 2-13
18. Adjust Vertical Gain — Page 2-13
19. Check Vertical Linearity — Page 2-13

20. Adjust Vertical High-Frequency Compensation Page 2-14

21. Check Vertical Amplifier Bandwidth Page 2-14

22. Check Trigger Source Operation Page 2-15

23. Check Vertical Amplifier Isolation Page 2-15

24. Check Vertical Modes Page 2-15

25. Check Beamfinder Operation Page 2-16

Horizontal Deflection System

26. Adjust Limit Centering Page 2-17

27. Adjust Horizontal Gain Page 2-17

28. Adjust Position Page 2-17

29. Adjust Horizontal Linearity Page 2-17

30. Adjust High-Frequency Timing Page 2-18

Calibrator

31. Adjust Calibrator Output Voltage Page 2-18

32. Check Calibrator Repetition Rate Page 2-19

Check Signals Function

33. Check Vertical Signal Out Page 2-19

34. Check +Sawtooth Out Page 2-20

35. Check +Gate Out Page 2-20

Readout Operation

36. Check Readout System Operation Page 2-20

37. Check Readout Gate Trig'd Operation Page 2-21

Storage System

38. Check Storage Operation Page 2-22

39. Adjust Storage Operation Page 2-22

40. Check Save Function Page 2-24

41. Check Rear Panel Storage Functions Page 2-24

POWER SUPPLY

Equipment Required

1. Precision dc voltmeter
2. Dc Voltmeter
3. Three-inch screwdriver

Control Settings

Preset the 7613 controls as follows:

INTENSITY	Counterclockwise (off)
VERT MODE	LEFT
TRIG SOURCE	LEFT
Display Selection	NON STORE

1. Adjust −50 Volt Power Supply

a. Connect the precision dc voltmeter between −50 volt (TP50) and chassis ground. See Fig. 2-1B for test point location.

b. Check—for a meter reading of −50 volts ±0.1 volt.

c. Adjust— −50 V Adjust, R881, for a meter reading of exactly −50 volts. See Fig. 2-1B for adjustment location.

d. Interaction—any change in the setting of R881 can affect the operation of all other circuits in the 7613.

2. Check Remaining Power-Supply Voltages

a. Check—each supply with the precision dc voltmeter to ensure that all output voltages are within the tolerances given in Table 2-1. Power supply test points are shown in Fig. 2-1A.

NOTE

Ripple and regulation of the individual power supplies can be checked using the procedure given under Troubleshooting Techniques in Section 4.

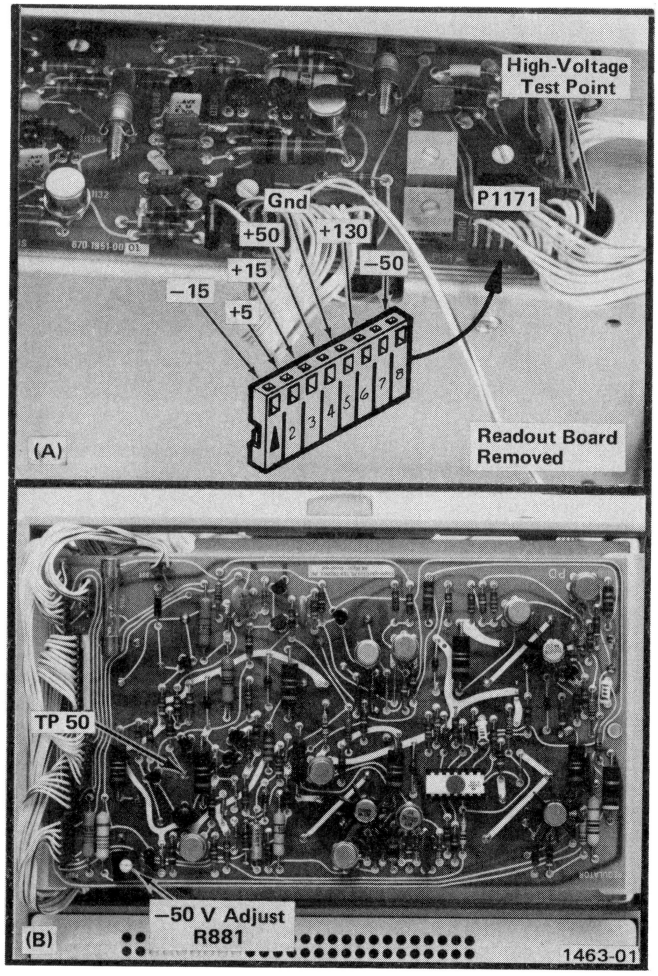

Fig. 2-1. (A) Location of power supply and high-voltage test points (right side of instrument); (B) Location of −50 V adjustment (Low Voltage Regulator board).

TABLE 2-1

Power Supply Tolerance

Power Supply	Test Point	Output Voltage Tolerance
−50 Volt	Pin 8 P1171	±0.1 Volt
−15 Volt	1 Pin P1171	±0.1 Volt
+5 Volt	2 Pin P1171	±0.07 Volt
+15 Volt	3 Pin P1171	±0.1 Volt
+50 Volt	4 Pin P1171	±0.3 Volt
+130 Volt	6 Pin P1171	±5.2 Volts

3. Check High-Voltage Power Supply

a. Turn off instrument.

b. Set the dc voltmeter (VOM) to measure at least 3000 volts. Then, connect it between the high voltage test points and chassis ground. See Fig. 2-1A for location.

c. Press power switch (turn on instrument). Check meter reading; −1475 volts ±45 volts.

d. Turn off instrument. Disconnect the dc voltmeter.

e. Turn on instrument.

DISPLAY AND Z-AXIS

Equipment Required

1. Test oscilloscope
2. Calibration Fixture
3. Time-base unit
4. Dc Voltmeter (VOM)
5. Vertical amplifier unit
6. Time-mark generator
7. Medium-frequency generator
8. 18-inch 50-ohm bnc cable
9. 42-inch 50-ohm bnc cable
10. 5 ns GR cable
11. 50-ohm GR in-line termination
12. Bnc Tee connector
13. Three-inch screwdriver
14. Low-capacitance screwdriver

Control settings

Preset the 7613 controls as follows:

INTENSITY	Midrange
VERT MODE	LEFT
TRIG SOURCE	LEFT
Display selection	NON STORE
READOUT INTENSITY	Midrange

4. Adjust CRT Grid Bias

a. Install the Calibration Fixture in the left vertical compartment and press the LEFT VERT MODE button. Set the Calibration Fixture Test switch to Vert or Horiz +Step Resp, Amplitude control fully counterclockwise, and Position control to midrange.

b. Install the time-base unit in the horizontal compartment, and set the sweep rate for 1 ms/div with auto, internal triggering.

c. Adjust the Calibration Fixture Position control to center the trace, then adjust both INTENSITY and READOUT INTENSITY controls fully counterclockwise.

d. Connect a 10X probe from the test oscilloscope to the Z-Axis test point and the probe ground lead to chassis ground. See Fig. 2-2 for test point location.

e. Set the test oscilloscope to dc input and the vertical deflection factor to 5 V/div (at the probe tip).

f. Adjust the 7613 INTENSITY control for a display ampliture two divisions (10 volts) above the center graticule line.

g. Adjust—CRT Grid Bias, R1248, until the trace on the 7613 is just extinguished. Set the INTENSITY control for a viewable trace. See Fig. 2-2 for adjustment location.

5. Check Z-Axis DC Levels

a. Set the vertical deflection factor on the test oscilloscope for 10 V/div, dc input. (The probe tip remains connected to the Z-Axis test point).

b. Set the time-base unit sweep rate of the 7613 to 50 ms/div, not intensified, and the time-base unit sweep rate of the test oscilloscope to 1 s/div.

c. Adjust the Calibration Fixture Position control to position the trace off screen, then adjust the INTENSITY control fully clockwise.

d. Check—the test oscilloscope display amplitude for at least 58 volts. Note this reading.

e. Adjust the time-base unit in the 7613 to 0.1 s/div.

f. Check—the pulse amplitude on the test oscilloscope for approximately 25 to 35 volts less than the amplitude noted in part d of this step.

g. Set the 7613 time-base plug-in to 0.2 ms/div and the test oscilloscope time-base plug-in to 0.5 ms/div.

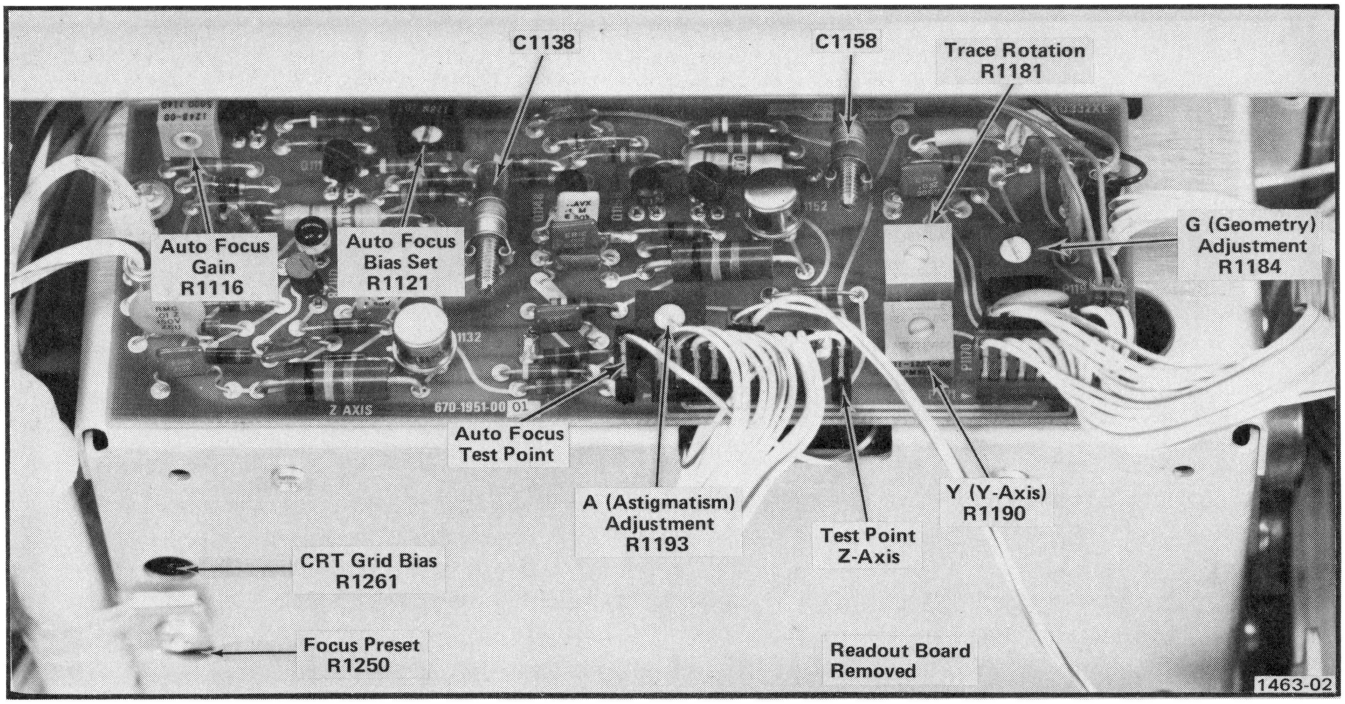

Fig. 2-2. Location of Display and Z Axis adjustments and test points.

h. Adjust the INTENSITY control for three divisions of vertical deflection on the test oscilloscope. Position the display so the positive leading edge of the waveform is displayed.

i. Adjust—C1158, for optimum square leading corner of the positive leading edge of the waveform (use a low capacitance screwdriver). See Fig. 2-2 for adjustment location.

j. Disconnect the probe.

6. Adjust Auto Focus Compensation

a. Connect the 10X probe to the Auto Focus Test Point. See Fig. 2-2 for adjustment location.

b. Adjust the INTENSITY control for three divisions of vertical deflection on the test oscilloscope. Position the display so the positive leading edge of the waveform is displayed (if three divisions of vertical deflection cannot be obtained adjust R1116 and R1121 to midrange).

c. Adjust—C1138, for optimum square leading corner of the positive leading edge of the waveform (use a low capacitance screwdriver). See Fig. 2-2 for adjustment location.

d. Disconnect the probe.

e. Set the constant amplitude signal generator to 50 kHz reference frequency.

f. Connect the signal generator output to the Aux In connector of the Calibration Fixture. Set the Calibration Fixture for Vert of Horiz Aux In and the Position control to midrange.

g. Set the 7613 time-base unit to 20 μs/div, Mag to X10, and adjust INTENSITY until the display is just visible.

h. Adjust the Calibration Fixture Amplitude and Position controls for a 3.2 division display, centered vertically.

i. Adjust the time-base unit position control until the lowest part of the display is on the center vertical graticule line.

j. Adjust the front-panel FOCUS control to midrange. Adjust the intensity of the display so it is just visible.

k. Adjust—Focus Preset, R1242, and Astigmatism, R1193, for optimum focus. See Fig. 2-2 for adjustment location.

l. Connect a 10X probe from the test oscilloscope to the Z-Axis Test Point. See Fig. 2-2 for location.

m. Set the test oscilloscope to dc input and a vertical deflection factor of 10 V/div (measured at probe tip), and set the time-base unit to 0.1 ms/div.

n. Adjust the INTENSITY control for a 30 volt signal on the test oscilloscope.

o. Adjust—Auto Focus Bias Set, R1121, for optimum focus. See Fig. 2-2 for adjustment location.

p. Adjust the INTENSITY control for a 60 volt signal on the test oscilloscope.

q. Adjust—Auto Focus Gain, R1116, for optimum focus. See Fig. 2-2 for adjustment location.

r. Repeat parts k through q until optimum focus is achieved.

s. Disconnect all test equipment.

7. Adjust Trace Rotation

a. Adjust the INTENSITY control to midrange.

b. Adjust the trace to the center horizontal line with the Calibration Fixture Position control.

c. Check—trace aligns with the center horizontal line within 0.1 division.

d. Adjust—Trace Rotation, R1181, to align the trace with the center horizontal line. See Fig. 2-2 for adjustment location.

8. Adjust Y-Axis Alignment

a. Interchange the time-base and Calibration Fixture plug-in units.

b. Adjust the trace to the center vertical line with the Calibration Fixture Position control.

c. Check—trace aligns with the center vertical line within 0.1 division.

d. Adjust—Y-Axis, R1190, to align the trace with the center vertical line. See Fig. 2-2 for adjustment location.

9. Adjust Geometry

a. Remove the Calibration Fixture and install the time-base unit in the horizontal compartment. Install the Calibration Fixture in the left vertical compartment.

b. Set the VERT MODE switch to LEFT.

c. Connect the marker output of the time-mark generator to the Aux In connector of the Calibration Fixture.

d. Connect the trigger output of the time-mark generator to the external trigger input connector of the time-base unit.

e. Set the time-mark generator for 1 ms markers and 1 ms triggers.

f. Set the Calibration Fixture Test switch to Vert of Horiz Aux In and the Amplitude Step or Aux control fully clockwise.

g. Set the time-base for auto triggering from the external source at a sweep rate of 0.5 ms/div (magnifier off).

h. Set the time-base variable time/division control to obtain exactly one marker for each major graticule division.

i. Set the time-mark generator for both 1 ms and 0.1 ms markers.

j. Position the baseline of the markers as far toward the bottom of the graticule as possible with the Calibration Fixture Position control.

k. Check—vertical bowing and tilt of the marker display is less than 0.1 division (each 0.1 ms marker represents 0.1 division).

l. Adjust—Geometry, R1184, for minimum bowing of time-markers. Adjustment may have to be compromised to obtain less than 0.1 division bowing and tilt everywhere within the graticule area. See Fig. 2-2 for adjustment location.

NOTE

If Substep l is performed, it may be necessary to repeat Step 5.

m. Remove the Calibration Fixture from the plug-in compartment.

10. Check External Z-Axis Operation

a. Install the vertical amplifier unit in the right vertical compartment and set the VERT MODE switch to RIGHT. Set the TRIG SOURCE switch to RIGHT.

b. Connect the output of the medium-frequency generator to the input of the vertical amplifier through the 5 ns GR cable, 50-ohm GR in-line termination, and the bnc tee connector.

c. Set the vertical amplifier for a deflection factor of 1 V/div.

d. Set the time-base unit for Auto, Internal triggering at a calibrated sweep rate of 10 μs/div.

e. Set the medium-frequency generator for a two-division display at its reference frequency (50 kHz).

f. Connect the output of the bnc tee connector to the EXT Z-AXIS connector with the 42-inch 50-ohm bnc cable.

g. Check—that the top portion of the displayed waveform is blanked out.

h. Disconnect all test equipment and remove both plug-in units.

VERTICAL DEFLECTION SYSTEM For Instruments SN B150000-Above

Equipment Required

1. Calibration Fixture
2. Time-base unit
3. Medium-frequency signal generator
4. Vertical amplifier unit
5. 50-ohm bnc cable (2)
6. Calibrator-pin to bnc cable
7. Dual-input coupler
8. Low-capacitance screwdriver
9. Three-inch screwdriver

Control Settings

Preset the 7613 controls as follows:

INTENSITY	Midrange
READOUT INTENSITY	Off
VERT MODE	LEFT
TRIG SOURCE	VERT MODE
Display selection	NON-STORE

11. Adjust Vertical Centering

a. Install the time-base unit in the horizontal compartment and set it for Auto, Internal +Slope triggering at the sweep rate of 1 ms/div.

b. Install the Calibration Fixture in the left vertical compartment. Set the Calibration Fixture Test switch to Triggering Gain, and the Rep Rate switch to 1 kHz.

c. Check—that the trace is within 0.3 division of the graticule center line.

d. Adjust—Vertical Centering R2433, to position the trace to the center horizontal line. See Fig. 2-3 for adjustment location.

e. Set VERT MODE to RIGHT and repeat part c. Readjust Vertical Centering, R2433, for parts c and e if necessary.

f. Set VERT MODE to LEFT.

12. Adjust Vertical Gain

a. Set the Calibration Fixture Test switch to Vert of Horiz Gain, and set the time-base unit to 50 μs/div.

b. Position the bright center line of the display to the center horizontal graticule line.

c. Check—deflection for the center seven traces should be six divisions ±0.06 division.

d. Adjust—Vertical Gain, R2446, for exactly six divisions of deflection for the center seven traces. See Fig. 2-3 for adjustment location.

e. Remove the Calibration Fixture from the left vertical compartment and install it in the right vertical compartment.

f. Set the VERT MODE switch to RIGHT.

g. Check—deflection for the center seven traces should be six divisions ±1%.

h. Adjust—if necessary readjust Vertical Gain, R2446, for six divisions ±1%.

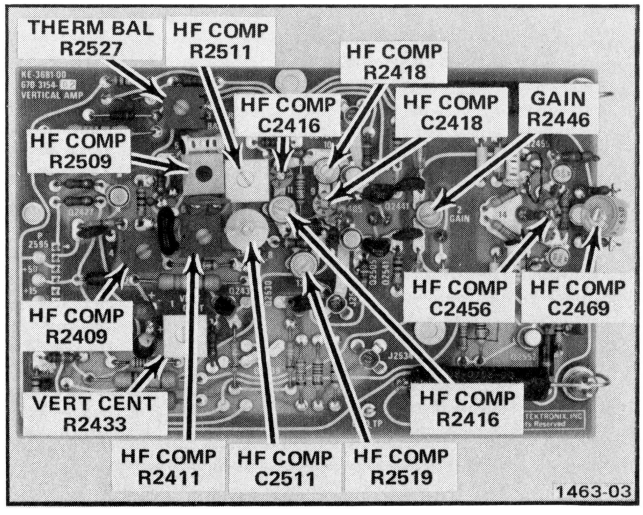

Fig. 2-3. Location of vertical system adjustments on Vertical Output board SN B150000-above.

13. Adjust Thermal Balance

NOTE

If the instrument being calibrated is not equipped with the readout feature, set the Thermal Balance control, R2527, for a reading of +8.65 volts measured at the R2527 end of C2524, and omit this part. See Fig. 2-3 for location.

a. Set the Calibration Fixture to +Step Resp and Amplitude to minimum. Position the trace to the top graticule line.

b. Install a vertical amplifier unit in the left vertical compartment. Set the 7613 VERT MODE to ALT. Vertically, position the trace to the bottom graticule line. Set the time-base unit to 10 ms/division. Set the 7613 INTENSITY to center of range. Adjust the READOUT INTENSITY control until readout is viewable.

c. Adjust—Thermal Balance, R2527, for minimum vertical movement of the displayed readout characters. If appreciable adjustment is required, re-check Step 12. See Fig. 2-3 for adjustment location.

d. Remove the vertical amplifier from the left vertical compartment.

e. Set the VERT MODE switch to RIGHT, and set the time-base unit to 1 ms/div.

14. Check Vertical Linearity

a. Adjust the Calibration Fixture Position control to keep the display centered on the graticule, and adjust the Amplitude control for a two-division display.

b. Check—vertically position the two divisions of display and check for not more than 0.1 division of compression or expansion anywhere within the graticule area.

c. Remove the Calibration Fixture from the right vertical compartment and install it in the left vertical compartment.

d. Set the VERT MODE switch to LEFT.

e. Repeat parts a and b for the left vertical amplifier.

15. Adjust Vertical High-Frequency Compensation

a. Adjust the Calibration Fixture Amplitude and Position controls for a six-division display. Set the Rep Rate switch to 100 kHz, and the time-base unit to 1 μs/div. Adjust trigger level for a stable display. Position the front corner (top of the display) to the center horizontal graticule line.

b. Check—for optimum square corner and flat top on displayed pulse with aberrations not to exceed +0.1 or −0.1 division with total peak-to-peak aberrations not to exceed 0.2 division.

c. Adjust—R2409 for a flat pulse top and minimum aberrations in the first 1 μs area. See Fig. 2-3 for adjustment location.

d. Set the time-base unit to 0.5 μs/div and adjust trigger level for a stable display.

e. Check—for a flat top on the first 500 ns portion of the pulse, with aberrations not to exceed +0.1 or −0.1 division with total peak-to-peak aberrations not to exceed 0.2 division.

f. Adjust—R2509 for a flat pulse top in the first 500 ns area. See Fig. 2-3 for adjustment location.

g. Set the Calibration Fixture Rep Rate switch to 1 MHz and set the time-base unit to 0.1 μs/div. Adjust the trigger level for a stable display.

h. Check—that the first 120 ns area of the pulse top is flat, with aberrations not to exceed +0.1 or −0.1 division with total peak-to-peak aberrations not to exceed 0.2 division.

i. Adjust—R2511 and C2511 for flatness and minimum aberrations of the first 120 ns area of the pulse top. (R2511 for tilt and C2511 for flatness). See Fig. 2-3 for adjustment location.

j. Set the time-base unit to 0.05 μs/div and Mag to X10 (5 ns/div). Adjust trigger level for a stable display.

k. Check—that the first 30 ns area of the pulse top is flat, with aberrations not to exceed +0.1 or −0.1 division with total peak-to-peak aberrations not to exceed 0.2 division.

l. Adjust— R2411 for flatness in the first 30 ns of the pulse top. See Fig. 2-3 for adjustment location.

m. Set the time-base to 0.1 μs/div and Mag to X10 (20 ns/div). Adjust trigger level for a stable display.

n. Check—for optimum leading corner and flat pulse top with minimum aberrations in the first 10 ns, aberrations not to exceed +0.1 or −0.1 division with total peak-to-peak aberrations not to exceed 0.2 division.

o. Adjust—refer to Table 2-2 for settings and adjustments for the first 2, 5, and 10 ns of the pulse top. Repeat parts a through o as necessary to obtain optimum response with minimum aberrations.

p. Adjust—position the top of the six-division display to the center horizontal graticule line. Set the time-base unit to 5 μs/div. Adjust triggering for a stable display.

q. Adjust—C2456 for 0.2 division of aberration on the front corner of the pulse top. Adjust the Calibration Fixture Position control for a centered six-division display and check for aberrations not to exceed +0.1 or −0.1 division with total peak-to-peak aberrations not to exceed 0.2 division.

r. Remove the Calibration Fixture from the left vertical compartment and install it in the right vertical compartment.

s. Set the VERT MODE switch to RIGHT.

t. Repeat parts a through o of this step.

TABLE 2-2

High-Frequency Compensation
For Instruments B150000-Above

Adjustment	Primary Area of Pulse Affected	Best Sweep Rate
C2416 R2416 R2519	First 10 ns	20ns/div
C2418 R2418 C2456	First 5 ns First 2 ns	20 ns/div 5 ns/div (X10 Mag and 0.05 μs)
C2469	Adjust for minimum overall aberrations	20 ns/div

u. Check—for optimum square leading corner and flat top on the displayed pulse with aberrations not to exceed +0.1 or −0.1 division, with total peak-to-peak aberrations not to exceed 0.2 division.

v. Adjust—if necessary, compromise the adjustments in parts a through o to obtain best response for both left and right vertical compartments.

w. To verify correct high-frequency compensation, perform the bandwidth check as given in step 21, and continue the remainder of the calibration procedure.

VERTICAL DEFLECTION SYSTEM
For Instruments SN B149999-Below

Equipment Required

1. Calibration Fixture
2. Time-base unit
3. Medium-frequency signal generator
4. Vertical amplifier unit
5. 50-ohm bnc cable (2)
6. Calibrator-pin to bnc cable
7. Dual-input coupler
8. Low-capacitance screwdriver
9. Three-inch screwdriver

Control Settings

Preset the 7613 controls as follows:

INTENSITY	Midrange
READOUT INTENSITY	Off
VERT MODE	LEFT
TRIG SOURCE	VERT MODE
Display selection	NON-STORE

16. Adjust Bias

a. Install the time-base unit in the horizontal compartment.

b. Set the time-base unit for Auto, External triggering at a sweep rate of 1 ms/div.

c. Install the Calibration Fixture in the left vertical compartment. Set the Calibration Fixture Test switch to Vert or Horiz Gain and the Rep Rate switch to 250 kHz.

d. Adjust—Bias, R486, for maximum gain. See Fig. 2-4 for adjustment location.

NOTE

Instruments equipped with Readout system will require adjustment of the Vertical Centering adjustment for optimum readout operation. See step 35.

17. Adjust Vertical Centering

a. Set the Calibration Fixture Test switch to Triggering Gain.

b. The trace should be within 0.3 division of the graticule center line.

c. Adjust—Vertical Centering, R403, to position the trace to the center horizontal line. See Fig. 2-4 for adjustment location.

18. Adjust Vertical Gain

a. Set the Calibration Fixture Test switch to Vert or Horiz Gain and the Rep Rate to 1 kHz.

b. Set the time-base unit for a sweep rate of 50 μs/div.

c. Position the bright center line of the display to the center horizontal graticule line.

d. Check—that the deflection of the seven center traces is six divisions ±0.06 division.

e. Adjust—Vertical Gain, R447, for exactly six divisions of deflection for the center seven traces. See Fig. 2-4 for adjustment location.

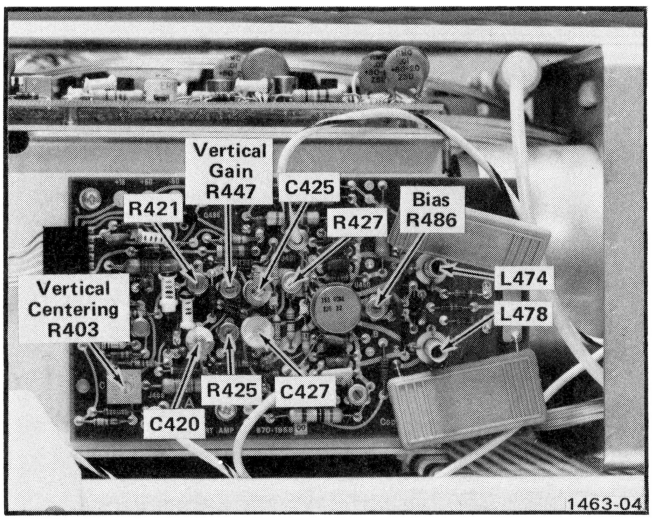

Fig. 2-4. Location of vertical system adjustments on Vertical Output board SN B149999-below.

f. Remove the Calibration Fixture from the left vertical compartment and install it into the right vertical compartment.

g. Set the VERT MODE switch to RIGHT.

h. Check—that deflection of the seven center traces is six divisions ±0.06 division if R447 was adjusted.

i. Readjust—Vertical Gain, R447, if necessary, for optimum gain for both vertical compartments.

19A. Check Vertical Linearity

a. Remove the Calibration Fixture. Install the vertical amplifier unit in the left vertical compartment and connect a 0.4 volt square wave signal from the CALIBRATOR output jack. Set the VERT MODE switch to LEFT.

b. Set the vertical amplifier deflection factor to 0.2 V/div. Adjust the position control to keep the display centered on the graticule and adjust the variable volts/division control if needed, for a two division display.

c. Check—position the two divisions of display vertically and check for not more than 0.1 division of compression of compression or expansion anywhere within the graticule area. Remove the vertical amplifier and install the Calibration Fixture in the same compartment.

19B. Adjust Thermal Compensation

a. Set the Calibration Fixture Test switch to Vert or +Step Resp, Rep Rate switch to 2.5 kHz, and adjust the Amplitude control for a six-division display.

b. Set the time-base unit sweep rate for .1 ms/div.

c. Check—for optimum square front corner and flat top on displayed pulse with aberrations not to exceed +0.03 or −0.03 division with total peak-to-peak aberrations not to exceed 0.03 division.

d. Adjust—Thermal compensation, R466, for optimum square front corner, with aberrations not to exceed ±0.03 divisions.

e. Set the Calibration Fixture Rep Rate switch to 25 kHz, and set the time-base unit sweep rate for 10 μs/div.

f. Adjust—Thermal compensation, R455, for optimum square front corner, with aberrations not to exceed ±0.03 divisions.

g. Set the Calibration Fixture Rep Rate switch to 250 kHz, and set the time-base unit sweep rate for 1 μs/div.

h. Check—repeat part c of this step.

i. Interaction—repeat part d through g until optimum adjustment is obtained.

20. Adjust Vertical High-Frequency Compensation

a. Set the Calibration Fixture Test switch to Vert or Horiz +Step Resp, Rep Rate switch to 250 kHz, and adjust the amplitude control for a six-division display.

b. Set the time-base unit for a calibrated sweep rate of 5 ns/div (use X10 magnifier). Set the trigger source switch to internal. Adjust trigger level control for a stable display, and center the display on the graticule.

c. Check—for optimum square corner and flat top on displayed pulse aberrations not to exceed +0.1 or −0.1 division with total peak-to-peak aberrations not to exceed 0.1 division.

d. Adjust—long term flat response R455 and R465 for a flat-top pulse with positioning from top to bottom of screen. See Fig. 2-4 for adjustment location.

e. Adjust—high-frequency compensation as given in Table 2-3 for square leading corner and flat top with minimum aberrations within limits given in part c. Repeat parts d and e as necessary to obtain optimum response with minimum aberrations.

TABLE 2-3

High-Frequency Compensation For Instruments SN B149999-Below

Adjustment	Primary Area Of Pulse Affected	Best Sweep Rate
C420 and R421	First 50 ns	50 ns/div
R425, C425, L474, and L478	First 20 ns	20 ns/div
C427 and R427	First 5 ns	20 ns/div

f. Remove the Calibration Fixture from the left vertical compartment and install it in the right vertical compartment.

g. Set the VERT MODE switch to RIGHT.

h. Check—for optimum square leading corner and flat top on the displayed pulse with aberrations not to exceed +0.1 or −0.I division, with total peak-to-peak aberrations not to exceed 0.1 division.

i. Adjust—if necessary, compromise the adjustment of C420, R421, R425, L474, L478, C427, and R427 for best response from both the left and right vertical compartments. See Fig. 2-4 for adjustment location.

j. To verify correct high-frequency compensation, perform the bandwidth check as given in next step.

21. Check Vertical Amplifier Bandwidth

a. Install the Calibration Fixture in the left vertical compartment. Set the Test Switch for Vert of Horiz Freq Resp and turn the Amplitude control fully clockwise.

b. Connect the medium-frequency generator to the CW In connector of the Calibration Fixture.

c. Set the medium-frequency generator to a reference frequency of 3 MHz and adjust the output for a six-division display, centered on the graticule. (The Calibration Fixture CW Leveled light must be on.)

d. Set the signal generator to cover a range to 100 MHz.

e. Check—that the 7613 display amplitude does not drop below 4.5 divisions as the signal generator frequency is adjusted upward to exactly 100 MHz.

f. Set the VERT MODE switch to RIGHT.

g. Remove the Calibration Fixture from the left vertical compartment and install it in the right vertical compartment.

h. Repeat parts c through e for the right vertical compartment.

22. Check Trigger Source Operation

a. Install the vertical amplifier unit in the left vertical compartment.

b. Set the time-base unit for Auto, Internal triggering at a sweep rate of 1 ms/div.

c. Set the vertical amplifier unit for a deflection factor of 0.2 V/div.

d. Connect the 0.4 volt CALIBRATOR pin-jack to the input of the vertical amplifier unit with the bnc to pin-jack cable.

e. Position the calibrator waveform display in the upper half of the graticule area with the vertical amplifier Position control.

f. Set the VERT MODE switch to RIGHT.

g. Set the Calibration Fixture Test switch to Vert or Horiz +Step Resp, Rep Rate switch to 100 Hz, and adjust the Amplitude control for a two-division display. Position the display in the lower half of the graticule area.

h. Set the VERT MODE switch to ALT.

i. Check—crt display, both square-wave displays are stable.

j. Set the TRIG SOURCE switch to LEFT.

k. Check—crt display; only signal from the Calibrator is stable.

l. Set the TRIG SOURCE switch to RIGHT.

m. Check—crt display; only signal from the Calibration Fixture is stable.

n. Disconnect the bnc to pin-jack cable.

o. Remove the Calibration Fixture from the right vertical compartment.

23. Check Vertical Amplifier Isolation

a. Set the VERT MODE and TRIG SOURCE switch to LEFT.

b. Connect the medium-frequency generator to the input of the vertical amplifier unit. Set the generator for 100 MHz output and adjust the amplitude for an eight-division display. Set the time-base unit for 0.5 μs/div sweep rate.

c. Set the VERT MODE switch to RIGHT.

d. Check—for a display of 0.1 division or less while adjusting the generator frequency from 100 MHz to 50 MHz. Do not include the trace width (line thickness) in this measurement.

e. Remove the vertical amplifier from the left compartment and install it in the right compartment. Leave the generator connected to the amplifier unit.

f. Set the TRIG SOURCE to RIGHT and adjust the amplitude for an eight-division display of the 100 MHz input signal.

g. Set the VERT MODE switch to LEFT.

h. Repeat part d of this step.

i. Disconnect the generator.

24. Check Vertical Modes

a. Install the Calibration Fixture in the left vertical compartment. Set the VERT MODE switch to LEFT; set the TRIG SOURCE switch to LEFT.

b. Connect the 0.4 volt CALIBRATOR output to the inputs of both the amplifier and the Calibration Fixture (Aux In), with the bnc to pin-jack cable and dual-input coupler.

c. Set the time-base unit for Auto, Internal triggering, at a sweep rate of 0.5 ms/div.

d. Set the Calibration Fixture Test switch to Aux In.

e. Adjust the amplitude of the Calibration Fixture for two divisions of display and position the trace on the second and fourth graticule lines.

f. Set the VERT MODE and TRIG SOURCE switch to RIGHT.

g. Set the vertical amplifier unit for two divisions of vertical deflection and position the trace on the sixth and eighth graticule lines.

h. Set the TRIG SOURCE to VERT MODE and the VERT MODE to ALT.

i. Check—that traces from both vertical compartments appear on the crt.

j. Set the VERT MODE switch to ADD.

k. Check—that the resultant trace is the algebraic sum of the two vertical signals. For example, if the traces in parts c and f are exactly two divisions each. the resultant trace will be exactly four divisions.

l. Set the VERT MODE switch to ALT and disconnect the cables.

m. Position the traces about two divisions apart.

n. Set the sweep rate to 50 ms/div.

o. Check—that the two vertical traces are alternately displayed.

p. Set VERT MODE switch to CHOP.

q. Check—that two separate traces appear simultaneously on the crt.

r. Disconnect all test equipment and remove all plug-ins.

25. Check Beamfinder Operation

a. Set the position controls on the amplifier and time-base units fully clockwise.

b. Press the BEAMFINDER button.

c. Check—that the trace is within the graticule area.

d. Set the position controls on the amplifier and time-base units fully counterclockwise and repeat parts b and c.

HORIZONTAL DEFLECTION SYSTEM

Equipment Required

1. Test oscilloscope
2. Time-base unit
3. Calibration Fixture
4. Vertical amplifier unit
5. Time-mark generator
6. Low-frequency generator
7. 10X probes (2)
8. 42-inch 50-ohm bnc cable
9. Low-capacitance screwdriver
10. Three-inch screwdriver

Preset the 7613 controls as follows:

INTENSITY	Midrange
VERT MODE	LEFT
TRIG SOURCE	VERT MODE
Display selection	NON-STORE
READOUT INTENSITY	Off (in detent)

26. Adjust Limit Centering

a. Install a vertical amplifier unit into the horizontal compartment of the 7613. Set the vertical deflection factor to 10 mV with dc coupling, and set the Position control to midrange.

b. Set the time-base unit of the test oscilloscope for a 10 μs/div sweep rate, Auto, ac-coupled and Internal triggering. Set the vertical amplifier deflection factor for 0.5 V/div (5 V/div at probe tip) on both channel inputs, alternate display mode, with vertical amplifier inputs set to ground.

c. Connect 10X probes from the two vertical channel inputs of the test oscilloscope to the two horizontal deflection plate leads of the 7613.

d. Adjust the vertical Position controls of the test oscilloscope vertical amplifiers so that both traces are at the top graticule line.

e. Set the test oscilloscope vertical amplifier inputs to dc.

f. Connect the low-frequency generator to the input of the vertical amplifier unit.

g. Set the generator for a 50 kHz, 0.5 volt amplitude (one division) output signal.

h. Adjust—Limit Centering, R535, to bring the lower edges of the two traces to the same dc level. See Fig. 2-5 for adjustment location.

i. Disconnect both probes from the horizontal deflection plate leads.

j. Disconnect the generator and remove the vertical amplifier unit from the horizontal compartment.

27. Adjust Horizontal Gain

a. Install a time-base unit in the left vertical compartment. Set the sweep rate to 10 μs/div, triggering to Auto, Internal, ac.

b. Install the Calibration Fixture in the horizontal compartment and set the Rep Rate switch to 100 kHz.

c. Set the Calibration Fixture Test switch to Vert or Horiz Gain and center the display with the Position control.

d. Adjust—Gain, R512, for eight divisions of deflection between the second and eighth traces. See Fig. 2-5 for adjustment location.

28. Adjust Position

a. Set the Calibration Fixture Test switch to Triggering Gain.

b. Adjust—Position, R525, to set the trace on the center graticule line. See Fig. 2-5 for adjustment location.

29. Check Horizontal Linearity

a. Set the Calibration Fixture Test switch to Vert or Horiz +Step Resp.

b. Adjust the Amplitude and Position controls for a centered, two-division display.

c. Check—that there is 0.1 division or less compression or expansion when the trace is positioned anywhere within the graticule area.

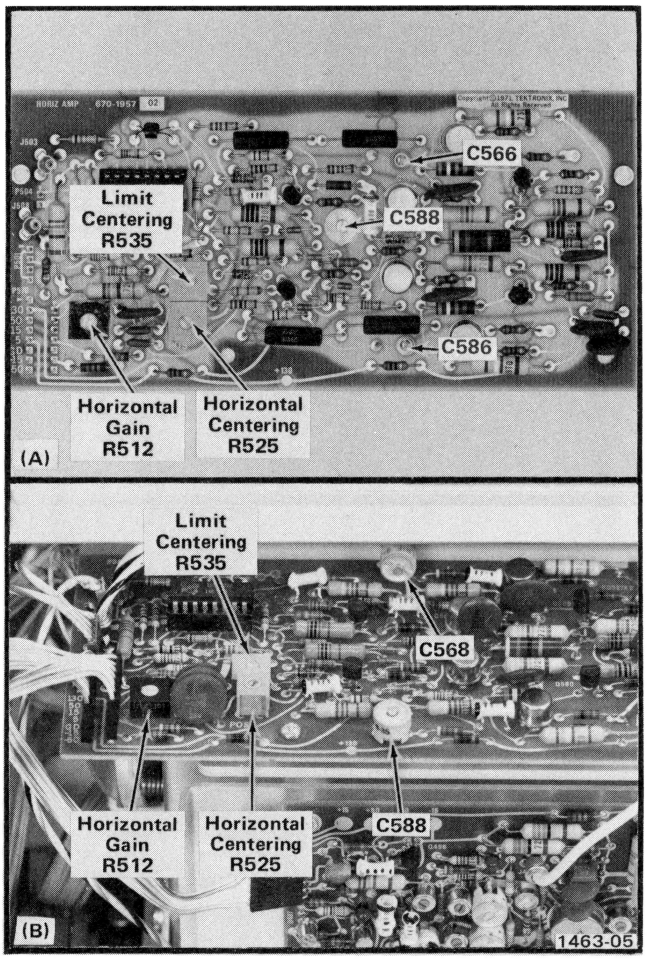

Fig. 2-5. Location of horizontal system adjustments on Horizontal Amplifier board (SN B020000-above (A); SN B019999-below (B).

30. Adjust High-Frequency Timing

a. Install a vertical amplifier unit in the left vertical compartment and a time-base unit in the horizontal compartment.

b. Set the time-base unit for Auto, Internal triggering at a sweep rate of 1 ms/div.

c. Connect the time-mark generator to the input connector of the vertical amplifier unit.

d. Set the time-mark generator for 1-ms markers. Set the deflection factor of the vertical amplifier unit so the markers are at least two divisions in amplitude.

e. Position the first marker to the left vertical line of the graticule.

f. Set the time-base unit sweep calibration adjustment for one marker each major graticule division between the second and tenth lines (center eight divisions).

g. Check—refer to the time-base unit instruction manual for performance check or calibration procedures for checking high-frequency timing and linearity. Use the procedures and limits given for the three fastest sweep rates that do not exceed 5 ns/div.

h. Set the time-mark generator for 10-ns markers.

i. Set the time-base unit for a 10 ns/div sweep rate with sweep magnification.

j. Set the vertical amplifier unit vertical deflection factor for about two divisions of display.

k. Check—the crt display for one marker each division over the center eight divisions.

l. Adjust—for SN B070000-above, C588, for one marker each division. For SN B069999-below, adjust C568 and C588 for one marker each division while maintaining approximately equal capacitances. See Fig 2-5 for adjustment location.

m. Set the time-base unit for a 5 ns/div sweep rate with sweep magnification.

n. Adjust—for SN B070000-above, C566 and C586 for one marker each division while maintaining approximately equal capacitances. For SN B069999-below, readjust C568 and C588 for best compromise between 5 and 10 nanosecond timing. See Fig. 2-5 for adjustment location.

o. Interaction—repeat part 1.

p. Disconnect time-mark generator and remove the time-base unit.

CALIBRATOR

Equipment Required

1. Precision dc voltmeter
2. Vertical amplifier unit
3. Time-base unit
4. Bnc to pin-jack cable
5. Three-inch screwdriver

Control Settings

Preset the 7613 controls as follows:

INTENSITY	Midrange
VERT MODE	LEFT
TRIG SOURCE	VERT MODE
Display selection	NON-STORE
READOUT INTENSITY	Off (in detent)

31. Adjust Calibrator Output Voltage

a. Change the jumper P1066 to the dc position. See Fig. 2-6 for location.

b. Connect the precision dc voltmeter between the 4 V pin-jack and the pin-jack ground.

c. Check—meter reading; 4 volts ±0.04 volt (within ±0.08 volt if this measurement is made outside the +15°C to +35°C range).

d. Adjust—4 Volts, R1077, for a meter reading of exactly 4 volts. See Fig. 2-6 for adjustment location.

e. Connect the precision dc voltmeter between the 0.4 V pin-jack and the pin-jack ground.

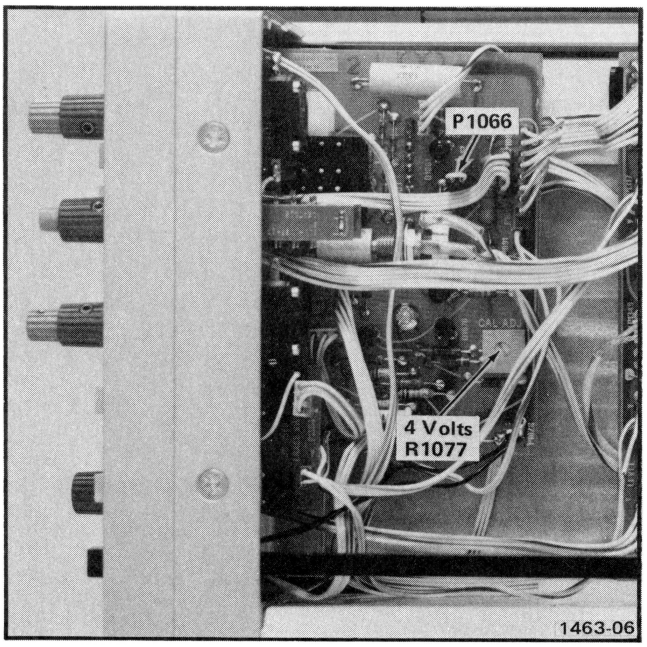

Fig. 2-6. Location of calibrator adjustments on Calibrator board.

f. Check—meter reading; 0.4 volt ±0.004 volt (within 0.008 volt if this measurement is made outside the +15°C to +35°C range).

g. Connect the precision dc voltmeter between the 40 mV pin-jack and the pin-jack ground.

h. Check—meter reading; 0.04 volt ±0.0004 volt (within 0.0008 volt if this measurement is made outside the +15°C to +35°C range).

i. Disconnect the precision dc voltmeter.

32. Check Calibrator Repetition Rate

a. Change jumper P1066 to the 1 kHz position. See Fig. 2-6 for location.

b. Install the vertical amplifier unit in the left vertical compartment and the time-base in the horizontal compartment.

c. Set the vertical amplifier unit for a deflection factor of one volt/division.

d. Set the time-base unit for Auto, Internal triggering at a sweep rate of 0.2 ms/div.

e. Connect the output from the 4 volt calibrator pin-jack to the input of the vertical amplifier unit with the bnc to pin-jack cable.

f. Position the start of the square wave to the left line of the graticule.

g. Check—crt display for length of one complete cycle between 4.2 and 6.3 divisions (1 kHz ±20%).

h. Disconnect the bnc to pin-jack cable.

CHECK SIGNALS FUNCTION

Equipment Required

1. Test oscilloscope
2. Vertical amplifier unit
3. Time-base unit
4. Dc voltmeter
5. 50-ohm termination
6. Bnc to pin-jack cable

33. Check Vertical Signal Out

a. Install the vertical amplifier unit in the left vertical compartment and the time-base unit in the horizontal compartment.

b. Set the time-base unit for Auto, Internal triggering at a sweep rate of 1 ms/div.

c. Connect the 0.4 volt calibrator signal to the input of the vertical amplifier. Set the vertical amplifier unit for a deflection factor of 0.2 V/div.

d. Check that a 2-division signal is displayed.

e. Connect a bnc cable from the VERT SIG OUT connector to the test oscilloscope vertical amplifier input, and set the deflection factor for 0.2 V/div.

f. Check—test oscilloscope display for a vertical signal 4 to 6 divisions in amplitude.

g. Connect a 50-ohm termination between the bnc cable and the test oscilloscope input. Set the deflection factor for 10 mV/div.

h. Check—test oscilloscope display for a vertical signal 4 to 6 divisions in amplitude.

i. Disconnect all cables.

34. Check +Sawtooth Out

a. Set the 7613 and test oscilloscope sweep rates to 50 μs/div.

b. Connect a bnc cable form the +SAWTOOTH OUT to the input of the test oscilloscope vertical amplifier unit. Set the deflection factor to 1 V/div.

c. Check—for a sawtooth display rising 0.9 to 1.1 divisions vertically for each division horizontally.

d. Connect a 50-ohm termination between the bnc cable and the vertical amplifier input. Set the deflection factor to 50 mV/div.

e. Check—for a sawtooth display rising 0.85 to 1.15 divisions vertically for each division horizontally.

f. Disconnect the cable and termination.

35. Check +Gate Out

a. Place the gate selector switch in the MAIN gate position (switch located on rear panel, near +GATE OUT connector).

b. Connect a bnc cable from the +GATE OUT connector to the vertical amplifier input. Set the deflection factor to 2 V/div.

c. Set the time-base unit for Auto, Internal triggering at a sweep rate of 1 μs/div.

d. Check—that the displayed signal is about 4.5 to 5.5 divisions in amplitude.

e. Connect a 50-ohm termination between the bnc cable and the vertical amplifier input. Set the deflection factor to 0.1 V/div.

f. Check—that the displayed signal is about 4.5 to 5.5 divisions in amplitude.

g. Disconnect the cable and termination.

READOUT OPERATION
Option 1 deletes this procedure

Equipment Required

1. Dual display vertical unit

NOTE

If the crt has been replaced, the words identify may not be positioned horizontally as described in steps 36c, i and j. Select a value for R519 which will provide a correct display.

36. Check Readout System Operation

a. Set VERT MODE switch to RIGHT.

b. Install a vertical amplifier unit in the right vertical compartment, and set it to a dual trace mode. Push and hold the Identify buttons on the vertical amplifier. (Switch S2110 on the Readout circuit board should be in the Free-Run position).

c. Check that the word IDENTIFY is within the top division and the bottom division of the graticule, and the words IDENTIFY are positioned within the left third of the graticule.

d. Adjust—Horizontal Centering, R525, to center the word identify on the vertical centerline. See Fig. 2-5 for adjustment location.

e. Check completeness of characters without over scanning (over scanning causes a bright dot where traces overlap).

f. Adjust—Character Scan, R2128, for fully scanned characters without overscanning. The m and the 5 will show the most change. See Fig. 2-7 for adjustment location.

g. Adjust—Character Height, R2273, as needed. (Typically 0.4 to 0.5 division amplitude characters provide good recognition of all characters). See Fig. 2-7 for adjustment location.

NOTE

The Vertical Amplifier Centering adjustment may need to be adjusted in conjunction with the Vertical Separation control R2291, to balance top and bottom rows of characters.

h. Adjust—Vertical Separation, R2291, to position the two rows of readout characters between 0.5 and one division from the top and bottom graticule lines. See Fig. 2-7 for adjustment location.

i. Set VERT MODE switch to LEFT.

j. Remove the vertical amplifier unit from the right vertical compartment and install it in the left vertical compartment. Push and hold the identify buttons on the vertical amplifier unit. Check that the words identify are positioned within the left third of the graticule.

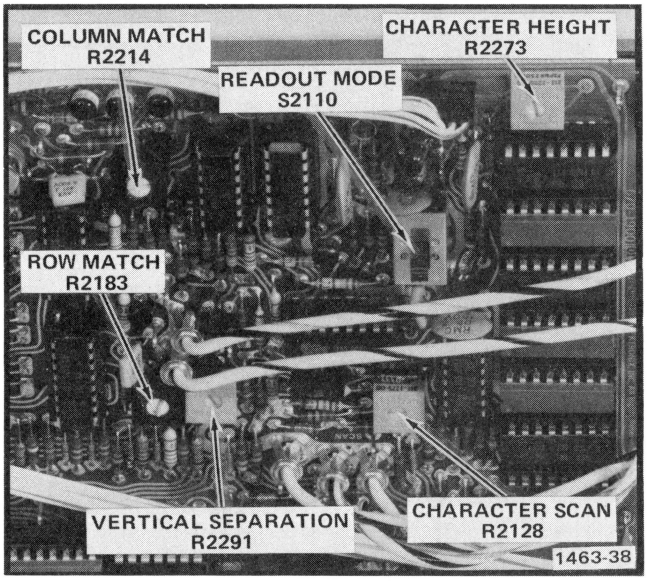

Fig. 2-7. Location of readout adjustments on the Readout board.

k. Remove the vertical amplifier unit from the left vertical compartment and install it in the horizontal compartment. Push and hold the identify buttons on the vertical amplifier unit. Check that the word identify is positioned within the right third of the graticule.

l. If correct characters are displayed there is no need to adjust the Row Match adjustment, R2183 or the Column Match adjustment, R2214.

m. Adjust—Row Match, R2183 and Column Match, R2214, for correct readout display. See Fig. 2-7 for adjustment location.

n. Remove the dual trace plug-in unit.

37. Check Readout Gate Trig'd Operation

a. Set switch S2110 to the Gate Trig'd position. See Fig. 2-7 for location.

b. Install the time-base unit in the horizontal compartment. Set sweep rate to 0.1 s/div.

c. Check—that no readout information is displayed until after the sweep begins. At fast sweep rates, this is not noticeable.

d. Set switch S2110 to the Free Run position.

STORAGE SYSTEM

Equipment Required

1. Test oscilloscope
2. Vertical amplifier unit
3. Time-base unit
4. Low-frequency signal generator
5. 10X probe
6. 50-ohm bnc cable
7. 50-ohm termination
8. Three-inch screwdriver

Control Settings

Preset the 7613 controls as follows:

VERT MODE	LEFT
TRIG SOURCE	VERT MODE
INTENSITY	Midrange
SAVE TIME	Counterclockwise (not in detent)
READOUT INTENSITY	Off (in detent)
SAVE	Out
PERSISTENCE	MAX
STORED INTENSITY	Counterclockwise
Display selection	NON-STORE

38. Check Storage Operation

a. Install a vertical amplifier unit in the left vertical compartment and a time-base unit in the horizontal compartment.

b. Set the vertical amplifier unit for a deflection factor of 0.5 V/div.

c. Set the time-base unit for Auto, Internal triggering at a 5 μs/div sweep rate.

d. Connect the low-frequency generator to the vertical amplifier unit using a 50-ohm cable and a 50-ohm termination.

e. Set the low-frequency generator for a six-division display of a 250 kHz signal.

f. Center the display on the crt and change the time-base unit to single sweep.

g. Turn the STORED INTENSITY control fully clockwise, then press the STORE button.

h. Press the ERASE button and reset the time-base unit.

i. Check—that the display is stored on the screen. If no display is stored, increase the INTENSITY control and repeat part h of this step until the display is stored. Check that the display is stored for at least 15 seconds. It may be necessary to adjust the STORED INTENSITY control counterclockwise to improve the contrast of the display.

j. Change the frequency of the low-frequency generator to 50 kHz and change the time-base unit sweep rate to 20 μs/div. Press the ERASE button and reset the time-base unit.

k. Check—that the stored display is stored on the screen and remains stored for at least 60 seconds. For longer viewtimes set the STORED INTENSITY control setting clockwise and adjust the INTENSITY control only enough to store the display, then reduce the STORED INTENSITY control setting counterclockwise until the display is just visible.

39. Adjust Storage Operation

a. Connect a 10X probe from the test oscilloscope to the Z Axis test point. See Fig. 2-2 for test point location.

b. Set the test oscilloscope time-base unit for a 2 ms division sweep rate, Auto mode, and the vertical amplifier for dc input with a deflection factor of 10 V/div (at probe tip).

c. Adjust the 7613 vertical amplifier Position control so the display is off screen and change the time-base unit to Auto mode.

d. Adjust the INTENSITY control for a 60-volt signal display on the test oscilloscope.

e. Adjust the 7613 vertical amplifier Position control so the display is on screen. Set the 7613 time-base unit to single sweep.

f. Move the 10X probe from the Z Axis test point to the Target test point on the storage board. See Fig. 2-8 for test point location.

g. Set the test oscilloscope vertical amplifier deflection factor to 5 V/div and the input selector switch to ground. Position the trace two divisions above the bottom graticule line (this is the zero volt reference point). Set the input selector switch to dc.

h. Adjust the STORED INTENSITY control fully clockwise, then press the STORE button.

i. Adjust—Level Preset, R1473, until the trace on the test oscilloscope coincides with the zero volt reference level. See Fig. 2-8 for adjustment location.

j. Adjust—Prep, R1467, while holding the ERASE button in until the display on the test oscilloscope coincides with the zero volt reference level. (R1467 sets the voltage level of the T3 portion of the erase pulse. Disregard T1 and T2 portions when making the adjustment. See Fig. 2-9). See Fig. 2-8 for adjustment location.

k. Press and release the ERASE button and observe that the background luminance is becoming visible in some areas of the crt while other areas are still dark. If the crt background luminance is bright all over after an erase cycle, decrease both Level Preset and Prep adjustments to −10 volts on the test oscilloscope.

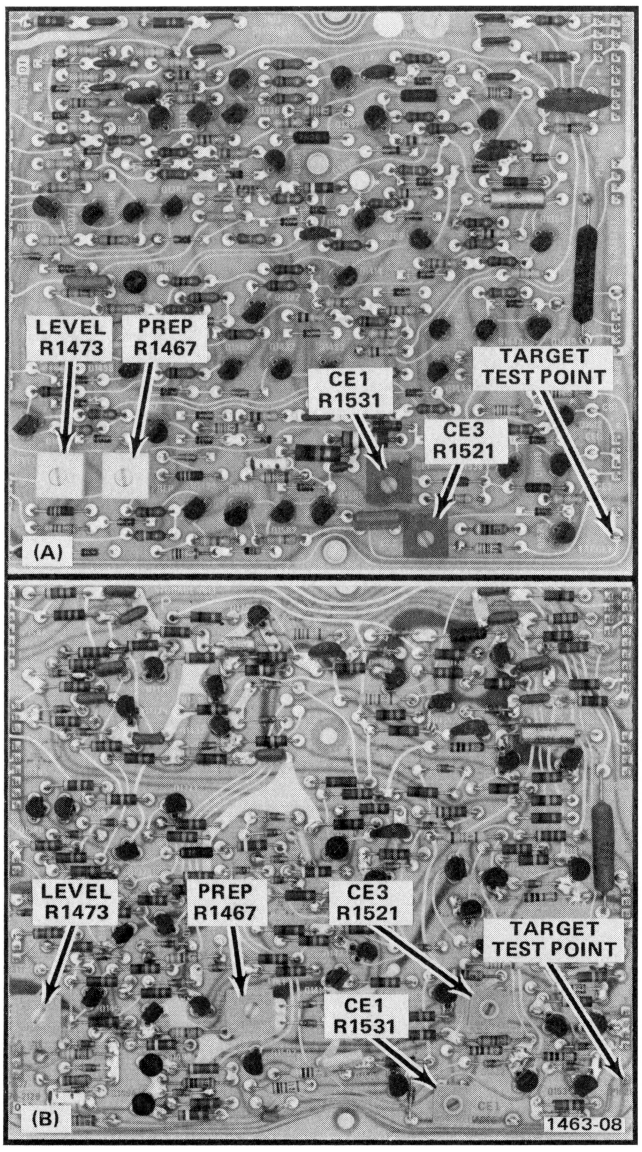

Fig. 2-8. Location of storage system adjustments on Storage board (SN B322545-above (A); SN B322544-below (B).

l. Increase the Level Preset adjustment 2 volts, then press in and hold the ERASE button and increase the Prep adjustment to the same voltage level. Release the ERASE button and observe the dark and shaded areas of the background luminance.

m. Repeat the Level Preset and Prep adjustments by increasing the voltage in 2-volt increments until the last dark area in the background luminance is just noticeable during the erase cycle.

n. Adjust—CE1, R1531, and CE3, R1521, for the most uniform background luminance after an erase cycle. See Fig. 2-8 for adjustment location.

o. Press and release the ERASE button and observe the last dark area. Increase the Level Preset and Prep adjustments until the last dark area is no longer visible during the erase cycle.

p. Increase the Prep adjustment above the Level Preset voltage level until a dark area becomes noticeable in the background luminance, after an erase cycle.

q. Set the low-frequency generator for a 250 kHz signal and set the time-base unit to 5 μs/div.

r. Press the ERASE button and reset the time-base unit.

s. Check—that the display is stored on the screen and remains visible for 15 seconds.

t. Adjust the PERSISTENCE CONTROL clockwise and check the test oscilloscope display for a pulse approximately 15 volts amplitude and 1.5 to 3.0 ms pulse width, with a repetition rate of 8.5 to 12 ms. Adjust the PERSISTENCE control counterclockwise.

u. Set the test oscilloscope vertical amplifier deflection factor to 20 V/div and the time-base unit to 50 ms/div. Set the time-base for normal triggered operation.

v. Check—press ERASE button and check for proper pulse display on the test oscilloscope display. See Fig. 2-9 for erase pulse display.

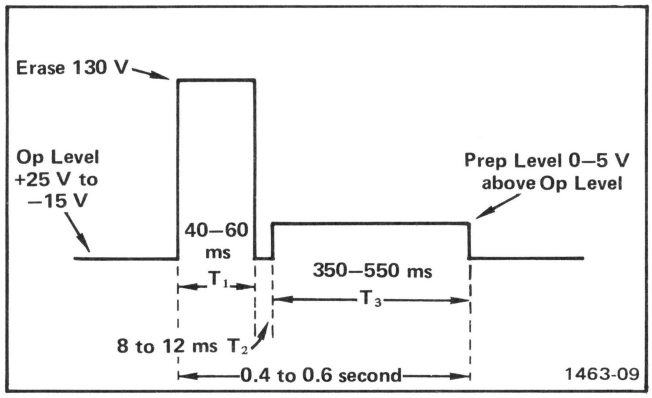

Fig. 2-9. Typical Erase waveform applied to the storage target backplate.

40. Check Save Function

a. Store a waveform display.

b. Press the SAVE button.

c. Adjust the SAVE TIME control clockwise for a visible waveform display.

d. Press the ERASE button and check that the waveform display will not erase.

e. Adjust the SAVE TIME control counterclockwise and into the MAX detent position. Press and release the SAVE button.

f. Check—that the waveform display is not visible. Turn the SAVE TIME control out of the MAX detent position and check that waveform display is visible.

g. Press the ERASE button. Adjust the SAVE TIME control counterclockwise and into the MAX detent position. Check that the waveform display was stored.

41. Check Rear Panel Storage Functions (Option 7 deletes this procedure)

a. Ground the center pin of the REMOTE ERASE IN connector on the rear panel.

b. Check—for an erase cycle.

c. Ground the center pin of the EXT SS RESET IN connector on the rear panel.

d. Check—for a stored display.

CIRCUIT DESCRIPTION

Introduction

This section of the manual contains a description of the circuitry used in the 7613 Oscilloscope. The description begins with a discussion of the instrument using the basic block diagram shown in Fig. 3-1. Then, each circuit is described in detail using detailed block diagrams to show the interconnections between the stages within each major circuit and the relationship of the external controls and connectors to the individual stages.

A complete block diagram is located in the Diagrams section at the back of this manual. This block diagram shows the overall relationship between all of the circuits. Complete schematics of each circuit are also given in the Diagrams section. Refer to these diagrams throughout the following circuit description for electrical values and relationship.

BLOCK DIAGRAM

The following discussion is provided to aid in understanding the overall concept of the 7613 before the individual circuits are discussed in detail. A basic block diagram of the 7613 is shown in Fig. 3-1. Only the basic interconnections between the individual blocks are shown on this diagram. Each block represents a major circuit within the instrument. The number on each block refers to the complete circuit diagram located at the rear of the manual.

Vertical signals to be displayed on the CRT are applied to the Vertical Interface circuit from both vertical plug-in compartments. The Vertical Interface circuit determines whether the signal from the left and/or right vertical unit is displayed. The selected vertical signal is then amplified by the Vertical Amplifier circuit to bring it to the level necessary to drive the vertical deflection plates of the CRT.

Horizontal signals for display on the CRT are connected to the Horizontal Amplifier circuit from the horizontal plug-in compartment. The Horizontal Amplifier circuit amplifies this signal to provide the horizontal deflection for the CRT.

The internal trigger signals from the vertical plug-in units are connected to the Trigger Selector circuit. This circuit selects the trigger signal which is connected to the horizontal plug-in unit. The Calibrator circuit produces a square-wave output signal with accurate amplitude which can be used to check the calibration of this instrument and the compensation of probes.

The Logic circuit develops control signals for use in other circuits within this instrument and the plug-in units. These output signals automatically determine the correct instrument operation in relation to the plug-ins installed and/or selected, plug-in control settings, and 7613 control settings. The CRT circuit produces the voltages and contains the controls necessary for operation of the cathode-ray tube. It also contains the Z-Axis Amplifier which provides the drive signal to control the intensity level of the CRT display.

The power necessary for the operation of this instrument is produced by the Low-Voltage Power Supply circuit. These voltages are connected to all circuits within the instrument.

CIRCUIT OPERATION

This section provides a detailed description of the electrical operation and relationship of the circuits in the 7613. The theory of operation for circuits unique to this instrument is described in detail in this discussion. Circuits which are commonly used in the electronics industry are not described in detail. If more information is desired on these commonly used circuits, refer to the following textbooks (also see books under Logic Fundamentals):

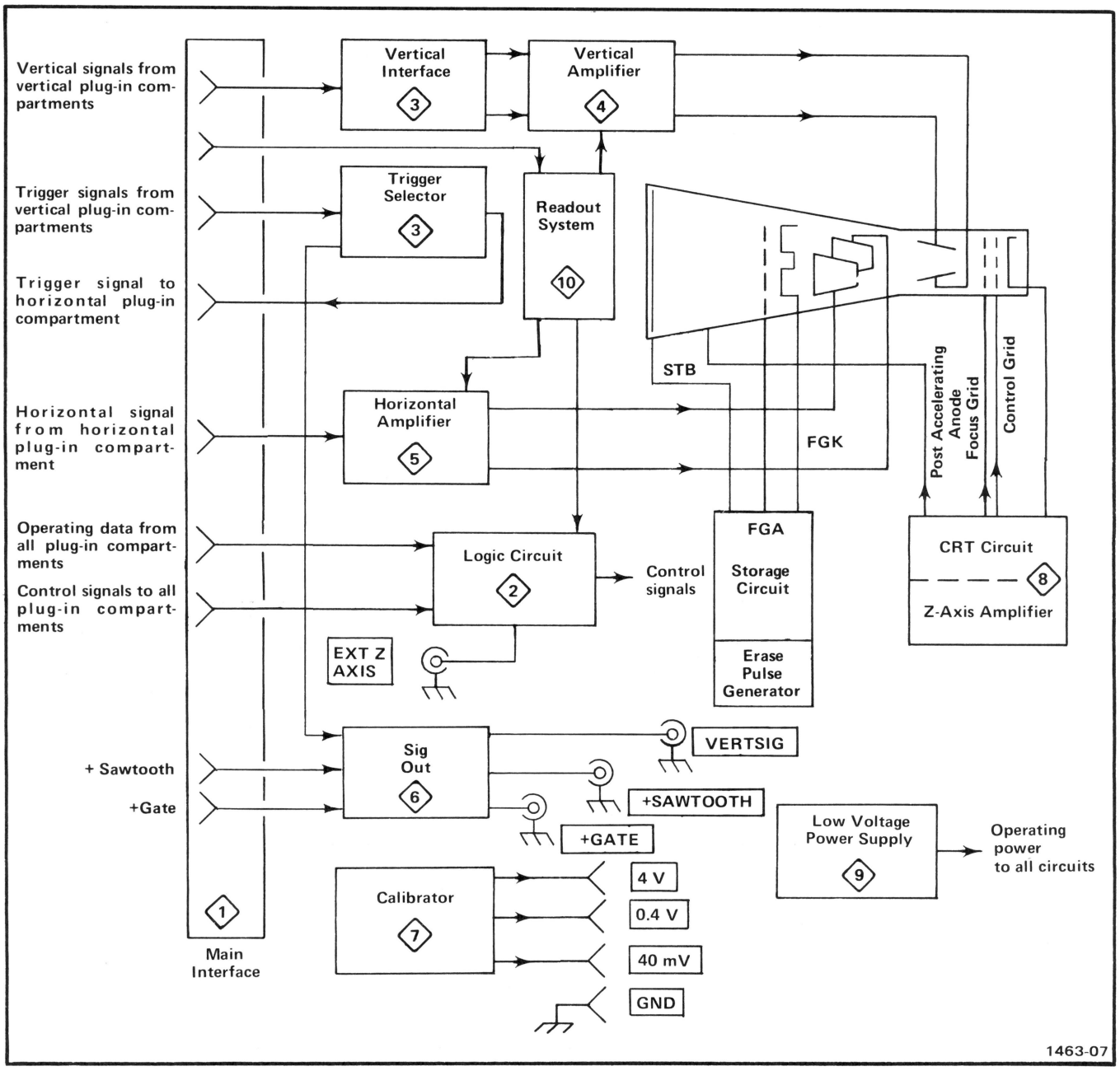

Fig. 3-1. Basic block diagram of 7613 Oscilloscope.

Phillip Cutler, "Semiconductor Circuit Analysis", McGraw-Hill, New York, 1964.

Lloyd P. Hunter (Ed.), "Handbook of Semiconductor Electronics", second edition, McGraw-Hill, New York, 1962.

Jacob Millman and Herbert Taub, "Pulse, Digital, and Switching Waveforms", McGraw-Hill, New York, 1965.

The following circuit analysis is written around the detailed block diagrams which are given for each major circuit. These detailed block diagrams give the names of the individual stages within the major circuits and show how they are connected together to form the major circuit. The block diagrams also show the inputs and outputs for each circuit and the relationship of the external controls and connectors to the individual stages. The circuit diagrams from which the detailed block diagrams are derived are shown in the Diagrams section.

LOGIC FUNDAMENTALS

Digital logic techniques are used to perform many functions within this instrument. The function and operation of the logic circuits are described using logic symbology and terminology. This portion of the manual is provided to aid in the understanding of these symbols and terms. The following information is a basic introduction to logic concepts, not a comprehensive discussion of the subject. For further information on binary number systems and the associated Boolean Algebra concepts, the derivation of logic functions, a more detailed analysis of digital logic, etc., refer to the following textbooks:

Robert C. Baron and Albert T. Piccirilli, "Digital Logic and Computer Operation", McGraw-Hill, New York, 1967.

Thomas C. Bartee, "Digital Computer Fundamentals", McGraw-Hill, New York, 1966.

Yaohan Chu, "Digital Computer Design Fundamentals", McGraw-Hill, New York, 1962.

Joseph Millman and Herbert Taub, "Pulse, Digital, and Switching Waveforms", McGraw-Hill, New York, Chapters 9 – 11, 1965.

Symbols

The operation of circuits within the 7613 which use digital techniques is described using the graphic symbols set forth in military standard MIL-STD-806B. Table 3-1 provides a basic logic reference for the logic devices used within this instrument. Any deviations from the standard symbology, or devices not defined by this standard will be described in the circuit description for the applicable device.

TABLE 3-1

Basic Logic Reference

Device	Symbol	Description	Input/Output Table
AND gate		A device with two or more inputs and one output. The output of the AND gate is HI if and only if all of the inputs are at the HI state.	Input / Output A B X LO LO LO LO HI LO HI LO LO HI HI HI
NAND gate	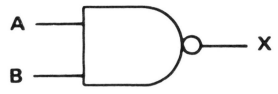	A device with two or more inputs and one output. The output of the NAND gate is LO if and only if all of the inputs are at the HI state.	Input / Output A B X LO LO HI LO HI HI HI LO HI HI HI LO
OR gate	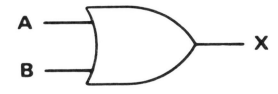	A device with two or more inputs and one output. The output of the OR gate is HI if one or more of the inputs are at the HI state.	Input / Output A B X LO LO LO LO HI HI HI LO HI HI HI HI
NOR gate	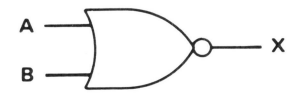	A device with two or more inputs and one output. The output of the NOR gate is LO if one or more of the inputs are at the HI state.	Input / Output A B X LO LO HI LO HI LO HI LO LO HI HI LO

TABLE 3-1 (cont)

Basic Logic Reference

Device	Symbol	Description	Input/Output Table
Inverter	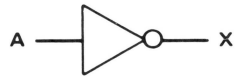	A device with one input and one output. The output state is always opposite to the input state.	Input / Output A: X LO: HI HI: LO
LO-state indicator	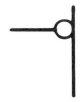	A small circle at the input or output of a symbol indicates that the LO state is the significant state. Absence of the circle indicates that the HI state is the significant state. Two examples follow:	
		AND gate with LO-state indicator at the A input. The output of this gate is HI if and only if the A input is LO and the B input is HI.	Input / Output A, B, X LO, LO, LO LO, HI, HI HI, LO, LO HI, HI, LO
	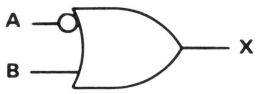	OR gate with LO-state indicator at the A input: The output of this gate is HI if either the A input is LO or the B input is HI.	Input / Output A, B, X LO, LO, HI LO, HI, HI HI, LO, LO HI, HI, HI
Edge symbol	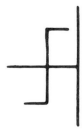	Normally superimposed on an input line to a logic symbol. Indicates that this input (usually the trigger input of a flip-flop) responds to the indicated transition of the applied signal.	
	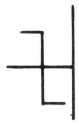		
Triggered (toggle) Flip-Flop	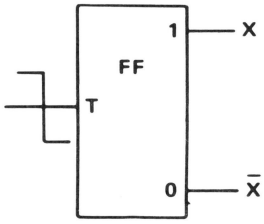	A bistable device with one input and two outputs (either or both outputs may be used). When triggered, the outputs change from one stable state to the other stable state with each trigger. The outputs are complementary (i.e., when one output is HI the other is LO). The edge symbol on the trigger (T) input may be of either polarity depending on the device.	Input / Output Condition before trigger pulse: X, $\bar{X}$ Condition after trigger pulse: X, $\bar{X}$ LO, HI, HI, LO HI, LO, LO, HI

TABLE 3-1 (cont)

Basic Logic Reference

Device	Symbol	Description	Input/Output Table
Set-Clear (J-K) Flip-Flop	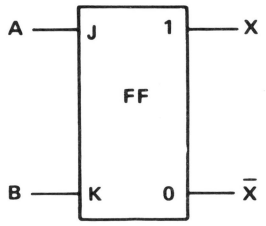	A bistable device with two inputs and two outputs (either or both outputs may be used). The outputs change state in response to the states at the inputs. The outputs are complementary (i.e., when one output is HI the other is LO).	Input / Output A: LO, LO, HI, HI B: LO, HI, LO, HI X: No change, LO, HI, Changes state $\overline{X}$: HI, LO
D (data) Type Flip-Flop	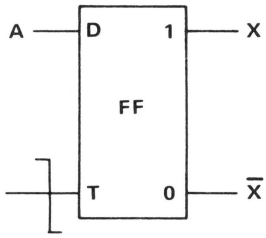	A bistable device with two inputs and two outputs (either or both outputs may be used). When triggered the state of the "1" output changes to the state at the data (D) input prior to the trigger. The outputs are complementary (i.e., when one output is HI the other is LO). The edge symbol on the trigger (T) input may be of either polarity, depending on the device.	Input / Output A: LO, HI X: LO, HI $\overline{X}$: HI, LO Output conditions shown after trigger pulse
Triggered Set-Clear (J-K) Flip-Flop	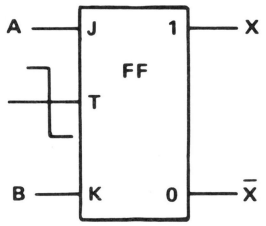	A bistable device with three or more inputs and two outputs (either or both outputs may be used). When triggered, the outputs change state in response to the states at the inputs prior to the trigger. The outputs are complementary (i.e., when one output is HI the other is LO). The edge symbol on the trigger (T) input may be of either polarity depending on the device.	Input / Output A: LO, LO, HI, HI B: LO, HI, LO, HI X: No change, LO, HI, Changes state $\overline{X}$: HI, LO Output conditions shown after trigger pulse
Flip-flop with direct inputs (may be applied to all triggered flip-flops)	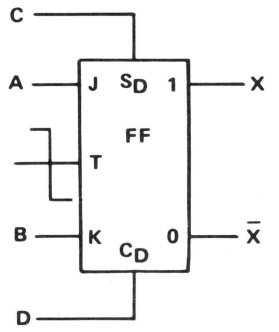	For devices with direct-set (S_D) or direct-clear (C_D) inputs, the indicated state at either of these inputs over-rides all other inputs (including trigger) to set the outputs to the states shown in the input/output table.	Input / Output A: 1, Φ, Φ, Φ B: 1, Φ, Φ, Φ C: LO, LO, HI, HI D: LO, HI, LO, HI X: No change [1], LO, HI, Undefined $\overline{X}$: LO, HI Φ = Has no effect in this case [1] Output state determined by conditions at triggered inputs

NOTE

Logic symbols used on the diagrams depict the logic function and may differ from the manufacturer's data.

Logic Polarity

All logic functions are described using the positive logic. Positive logic is a system of notation where the more positive of two levels (HI) is called the true or 1-state; the more negative level (LO) is called the false or 0-state. The HI-LO method of notation is used in this logic description. The specific voltages which constitute a HI or LO state vary between individual devices.

NOTE

The HI-LO logic notation can be conveniently converted to 1-0 notation by disregarding the first letter of each step. Thus:

HI = 1

LO = 0

Wherever possible, the input and output lines are named to indicate the functions that they perform when at the HI (true) state. For example, the line labeled, "Display B Command" means that the B Time-Base unit will be displayed when this line is HI or true. Likewise, the line labeled "X-Compensation Inhibit" means that the X-Compensation function is inhibited or disabled when this line is HI.

Input/Output Tables

Input/output (truth) tables are used in conjunction with the logic diagrams to show the input combinations which are of importance to a particular function, along with the resultant output conditions. This table may be given either for an individual device or for a complete logic stage. For examples of input/output tables for individual devices, see Table 3-1.

Non-Digital Devices

It should be noted that not all of the integrated circuit devices in this instrument are digital logic devices. The function of non-digital devices will be described individually using operating waveforms or other techniques to illustrate their function.

MAIN INTERFACE

Diagram 1 shows the plug-in interface and the interconnections between the plug-in compartments, circuit boards, etc. of this instrument.

LOGIC CIRCUIT

The Logic Circuit develops control signals for use in other circuits within this instrument and in the associated plug-in units. These output signals automatically determine the correct instrument operation in relation to the plug-in installed and/or selected, plug-in control settings, and the 7613 control settings. A schematic of this circuit is shown on diagram 2 at the rear of this manual.

Logic Block Diagram

A block diagram of the Logic Circuit is shown in Fig. 3-2. This diagram shows the source of the input control signals, the output signals produced by this circuit, and the basic interconnections between blocks. The interconnections shown are intended only to indicate inter-relation between blocks and do not indicate a direct connection or that only a single connection is made between the given blocks. Details of the inter-relationship between stages within this circuit are given in the circuit description which follows.

The operation of each of these stages is discussed relating the input signals and/or levels to the output, with consideration given to the various modes of operation that may affect the stage. A logic diagram is also provided where applicable. These diagrams are not discussed in detail, but are provided to aid in relating the function performed by a given stage to standard logic techniques. It should be noted that these logic diagrams are not an exact representation of the circuit but are only a logic diagram of the function performed by the stage. An input/output table is given, where applicable, for use along with this circuit description and logic diagram. These input/output tables document the combination of input conditions which are of importance to perform the prescribed function of an individual stage.

Z-Axis Logic

The Z-Axis Logic stage produces an output current which sets the intensity of the display on the CRT. The level of this output current is determined by the setting of the front-panel INTENSITY control, an external signal from the rear panel EXT Z AXIS input connector, or signals from the plug-in compartments. The Vertical Chopped Blanking from U55 is applied to this stage to blank the CRT display during vertical trace switching. The Intensity Limit input from the horizontal plug-in compartment provides protection for the CRT phosphor at slow sweep rates.

The Z-Axis Logic stage consists of transistor 108, dual-transistor Q90 and integrated circuit U99, which is a five-transistor array. A simplified schematic of the Z-Axis

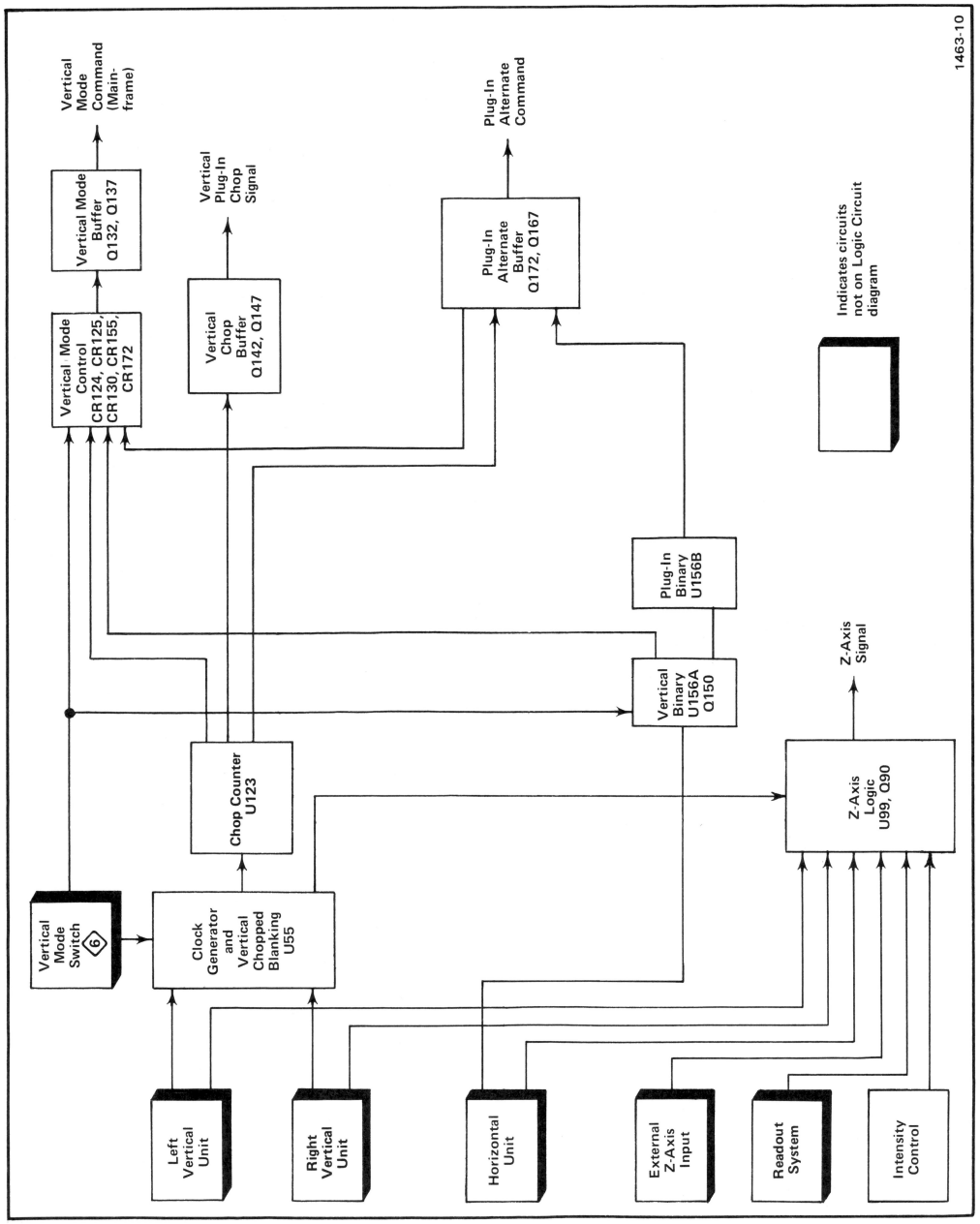

Fig. 3-2. Block diagram of Logic circuit.

Logic stage is shown in Fig. 3-3. Only the components essential to operation of this stage are shown in this simplified schematic.

Transistor U99C is connected in the common-base configuration to provide the output for this stage. The collector load for U99C is provided by the Z-Axis Amplifier in the CRT Circuit. Transistors U99D and U99E provide a current-limiting action for this stage. The collector current of U99D, represented by I_t, is the maximum amount of current that can flow in the circuit. The amount of this current is determined by the relationship between the Intensity Limit and Vertical Chopped Blanking. When both of these inputs are HI the collector current of U99D, I_t, is maximum. This maximum level of I_t is determined by current I_1 in the base circuit of U99D established by networks R76-R77 and R62-R63 into R110 and the collector of U99E. During Vertical Chopped Blanking, the respective input level goes LO. This shunts the current I_1 from the base of U99D so the collector current of U99D, I_t, drops to minimum to blank the CRT display during vertical trace switching.

The Intensity Limit function limits the output current of this stage to protect the CRT phosphor whenever the time-base unit is set to a slow sweep rate. For conditions that do not require limiting, quiescent current is added to I_1 from the +15-volt supply through R76-R77. When the time-base unit is set to a sweep rate which requires intensity

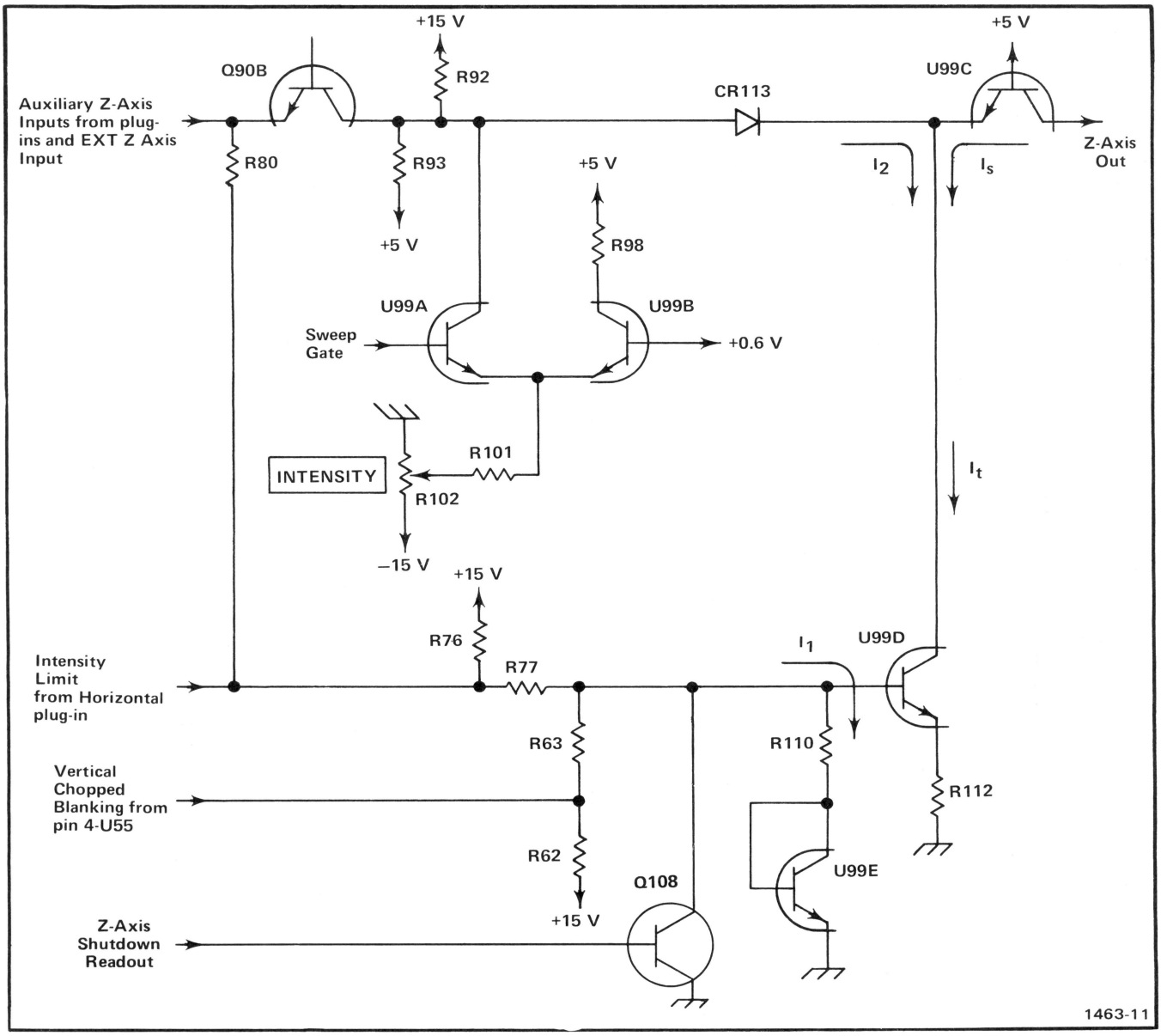

Fig. 3-3. Simplified schematic of Z-Axis Logic stage.

limiting, the Intensity Limit input goes to ground level in the plug-in unit. This reduces the level of I_1 at the base of U99D and therefore reduces I_t and the output current to reduce the intensity of the display. At the same time, the ground level from the Intensity Limit input is connected to the emitter of Q90B through R80. This connection limits the maximum level to which the INTENSITY control can be set to aid in obtaining intensity limiting at slow sweep rates.

The collector current of U99D is made up of two currents; I_s and I_2 is determined by divider R92 and R93. When the Sweep Gate level at the base of U99A is LO (no sweep in progress), I_2 is at its maximum level so that I_s is minimum to provide minimum intensity of the display ($I_s + I_2$ is always equal to I_t). During sweep time, the Sweep Gate level at the base of U99A as established by INTENSITY control R102 determines the output current. As the INTENSITY control is turned toward maximum, the level of I_2 decreases. This allows I_s to increase to produce a brighter display. The Auxiliary Z-Axis Inputs from the plug-in compartments and the intensity modulating signal from the EXT Z-AXIS input connector are connected to the emitter of Q90B. These signals modulate the level of I_2 to, in turn, modulate the intensity of the display.

When readout information is to be displayed on the CRT, the Z-Axis shutdown goes LO. This forward biases Q180, and it saturates, shunting I_1, through Q108 to ground. This reduces the output current to zero during the readout time.

Clock Generator

One half of integrated circuit U55 along with the external components shown in Fig. 3-4A make up the Clock Generator stage. R1, Q1, Q2, and Q3 represent an equivalent circuit contained within U55A. This circuit along with discrete components C59, R56, R57, and R59 comprise a two-megahertz free-running oscillator to provide a timing signal (clock) for mainframe vertical and plug-in chopping.

The stage operates as follows: Assume that Q2 is conducting and Q1 is off. The collector current of Q2 produces a voltage drop across R1 which holds Q1 off. This negative level at the collector of Q2 is also connected to pin 14 through Q3 (see waveforms in Fig. 3-4B at time T_0). Since there is no current through Q1, C59 begins to charge towards −15 volts through R56-R57. The emitter of Q1 goes negative as C59 charges until it reaches a level about 0.6 volt more negative than the level at its base. Then, Q1 is forward biased and its emitter rapidly rises positive. Since

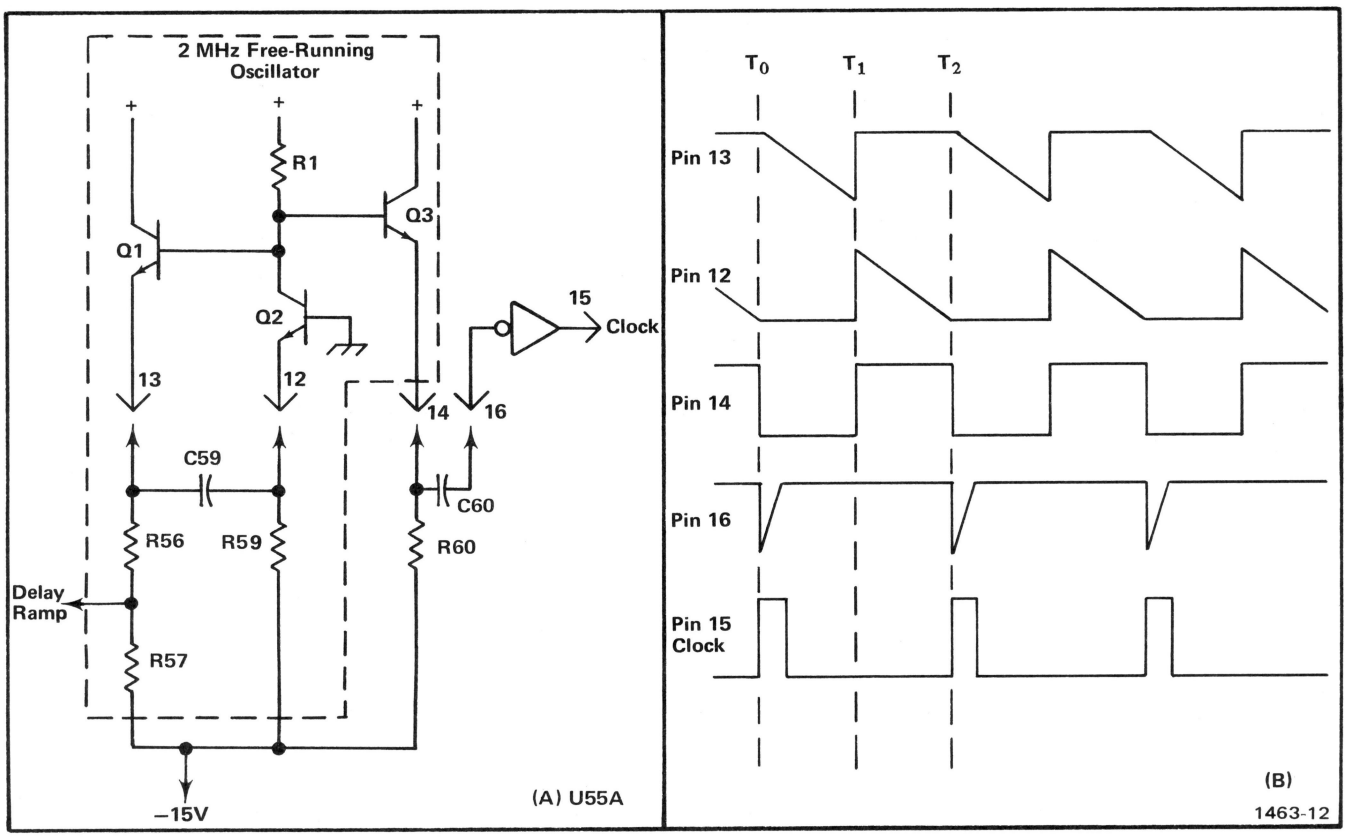

Fig. 3-4. (A) Diagram of Clock Generator stage. (B) Idealized waveforms from Clock Generator stage.

C59 cannot change its charge instantaneously, the sudden change in voltage at the emitter of Q1 pulls the emitter of Q2 positive also, to reverse-bias it. With Q2 reverse biased, its collector rises positive to produce a positive output level at pin 14 (see time T_1 on the waveforms).

Now, conditions are reversed. Since Q2 is reverse biased, there is no current through it. Therefore, C59 can begin to discharge through R59. The emitter level of Q2 follows the discharge of C59 until it reaches a level about 0.6 volt more negative than its base. Then Q2 is forward biased and its collector drops negative to reverse-bias Q1. The level at pin 14 drops negative also, to complete the cycle. Once again, C59 begins to charge through R56-R57 to start the second cycle.

Two outputs are provided from this oscillator. The Delay Ramp signal from the junction of R56-R57 is connected to the Vertical Chopped Blanking stage. This signal has the same waveshape as shown by the waveform at pin 13, with its slope determined by the divider ratio between R56-R57. A square-wave output is provided at pin 14. The frequency of this square wave is determined by the RC relationship between C59 and R1. The duty cycle is determined by the ratio of R56-R57 to R59.

The square wave at pin 14 is connected to pin 16 through C60. C60, along with the internal resistance of U55A, differentiates the square wave at pin 14 to produce a negative-going pulse coincident with the falling edge of the square wave (positive-going pulse coincident with rising edge has no effect on circuit operation). This negative-going pulse is connected to pin 15 through an inverter-shaper which is also part of U55A. The output at pin 15 is a positive-going Clock pulse at a repetition rate of about two megahertz.

Vertical Chopped Blanking

The Vertical Chopped Blanking stage is made up of the remaining half of integrated circuit U55B, Fig. 3-6A. This stage determines if Vertical Chopped Blanking pulses are required, based upon the operating mode of the vertical system or the plug-in units (dual trace units only). Vertical Chopped Blanking pulses are produced if: (1) VERT MODE switch is set to CHOP; (2) dual-trace vertical unit is operating in the chopped mode and that unit is being displayed; (3) dual-trace vertical unit is operating in the chopped mode with the VERT MODE switch set to ADD. The repetition rate of the negative-going Vertical Chopped Blanking pulse output at pin 4 is always two megahertz as determined by the Clock Generator stage.

The Delay Ramp signal from the Clock Generator stage determines the repetition rate and pulse width of the Vertical Chopped Blanking pulses. The Delay Ramp applied to pin 10 starts to go negative from a level of about +1.1 volts coincident with the leading edge of the Clock pulse (see waveforms in Fig. 3-5B). This results in a HI quiescent condition for the Vertical Chopped Blanking pulse. The slope of the negative-going Delay Ramp is determined by the Clock Generator stage. As it reaches a level slightly negative from ground, the Vertical Chopped Blanking pulse output level changes to the LO state. This signal remains LO until the Delay Ramp goes HI again. Notice the delay between the leading edge of the Clock pulse generated by U55A and the leading edge of the Vertical Chopped Blanking pulses (see Fig. 3-5B). The amount of delay between the leading edges of these pulses is determined by the slope of the Delay Ramp applied to pin 10. This delay is necessary due to the delay line in the vertical deflection system. Otherwise, the trace blanking resulting from the Vertical Chopped Blanking pulse would not coincide with the switching between the displayed traces. The duty cycle of the square wave produced in the Clock Generator stage determines the pulse width of the Vertical Chopped Blanking pulses (see Clock Generator discussion for more information).

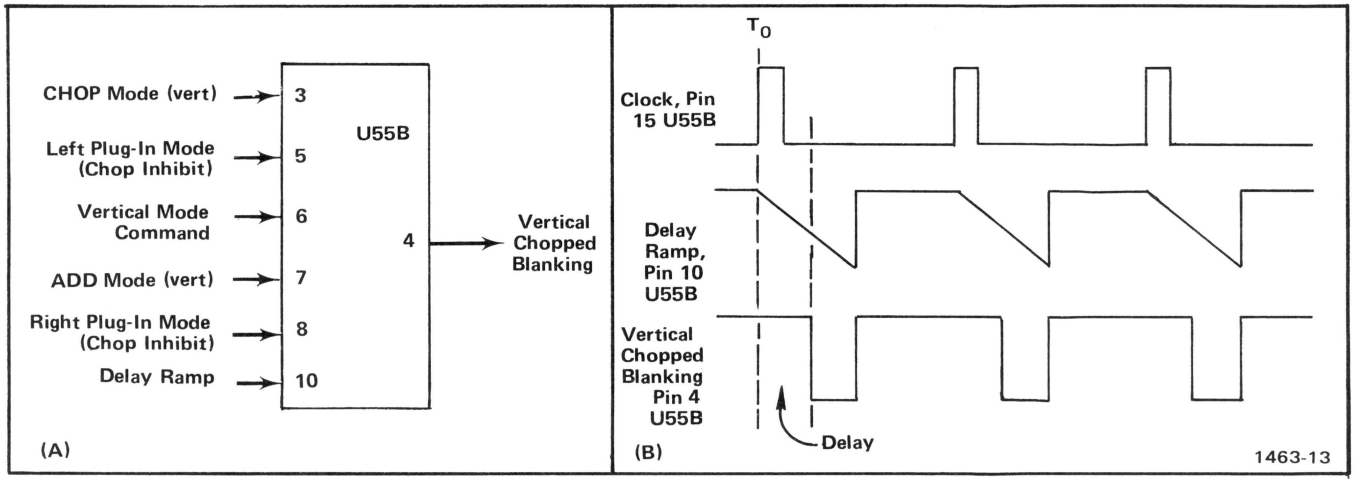

Fig. 3-5. (A) Input and output pins for Vertical Chopped Blanking stage, (B) Idealized waveforms for Vertical Chopped Blanking stage.

Whenever this instrument is turned on, the Vertical Chopped Blanking pulses are being produced at a two-megahertz rate. However, these pulses are available as an output at pin 4 only when the remaining inputs to U55B are at the correct levels. The following discussions give the operating conditions which produce Vertical Chopped Blanking pulses to blank the CRT during vertical trace switching. Fig. 3-5A identifies the functions of the pins of U55B.

1. CHOP VERTICAL MODE

When the VERT MODE switch is set to CHOP, Vertical Chopped Blanking pulses are available at pin 4 at all times. The input conditions necessary are:

PIN 3 HI—VERT MODE switch set to CHOP.

Pin 7 LO—VERT MODE switch set to any position except ADD.

Pin 10 LO—Delay Ramp more negative than about 0 volts.

2. LEFT VERTICAL UNIT SET FOR CHOPPED OPERATION

If the Left Vertical unit is set for chopped operation, the setting of the VERT MODE switch determines whether the Vertical Chopped Blanking pulses are available. If the VERT MODE switch is set to the CHOP position, conditions are as described in No. 1 above. Operation in the ADD position of the VERT MODE switch is given later. For the LEFT position of the VERT MODE switch, or when the left vertical unit is to be displayed in the ALT mode, Vertical Chopped Blanking pulses are available at all times (two-megahertz rate). The input conditions are:

Pin 3 LO—VERT MODE switch set to any position except CHOP.

Pin 5 LO—Left vertical unit set to chopped mode.

Pin 6 LO—Left vertical unit to be displayed (Vertical Mode Command LO).

Pin 7 LO—VERT MODE switch set to any position except ADD.

Pin 10 LO—Delay Ramp more negative than about 0 volts.

Notice that the Vertical Mode Command at pin 6 must be LO for output pulses to be available at pin 4. This means that when the VERT MODE switch is set to ALT, Vertical Chopped Blanking pulses are produced only during the time that the left vertical unit is to be displayed (unless right vertical unit is also set for chopped operation).

3. RIGHT VERTICAL UNIT SET FOR CHOPPED OPERATION

If the right vertical unit is set for chopped mode, operation is the same as described previously for the left vertical unit except that Vertical Chopped Blanking pulses are produced when the VERT MODE switch is set to RIGHT or when the Vertical Mode Command is HI in the ALT mode. The input conditions are:

Pin 3 LO—VERT MODE switch set to any position except CHOP.

Pin 6 HI—Right vertical unit to be displayed (Vertical Mode Command HI).

Pin 7 LO—VERT MODE switch set to any position except ADD.

Pin 8 LO—Right vertical unit set to chopped mode.

Pin 10 LO—Delay Ramp more negative than about 0 volts.

4. ADD VERTICAL MODE

When the VERT MODE switch is in the ADD position and either or both of the vertical units are operating in the chopped mode, Vertical Chopped Blanking pulses must be available to block out the transition between traces of the vertical units. The input conditions are:

Pin 3 LO—VERT MODE switch set to any position except CHOP.

Pin 5 LO—Left vertical unit set to chopped mode (can be HI if pin 8 is LO).

Pin 7 HI—VERT MODE switch set to ADD.

Pin 8 LO—Right vertical unit set to chopped mode (can be HI if pin 5 is LO).

Pin 10 LO—Delay Ramp more negative than about 0 volt.

Fig. 3-6A shows a logic diagram of the Vertical Chopped Blanking stage. Notice the comparator block on this diagram (one input connected to pin 10). The output of this comparator is determined by the relationship between the levels at its inputs. If pin 10 is more positive (HI) than the grounded input, the output is HI also; if it is more negative (LO), the output is LO. An input/output table for this stage is given in Fig. 3-6B.

Chop Counter

The Chop Counter stage produces the Mainframe Chop Signal and the Vertical Plug-In Chop Signal. The Clock

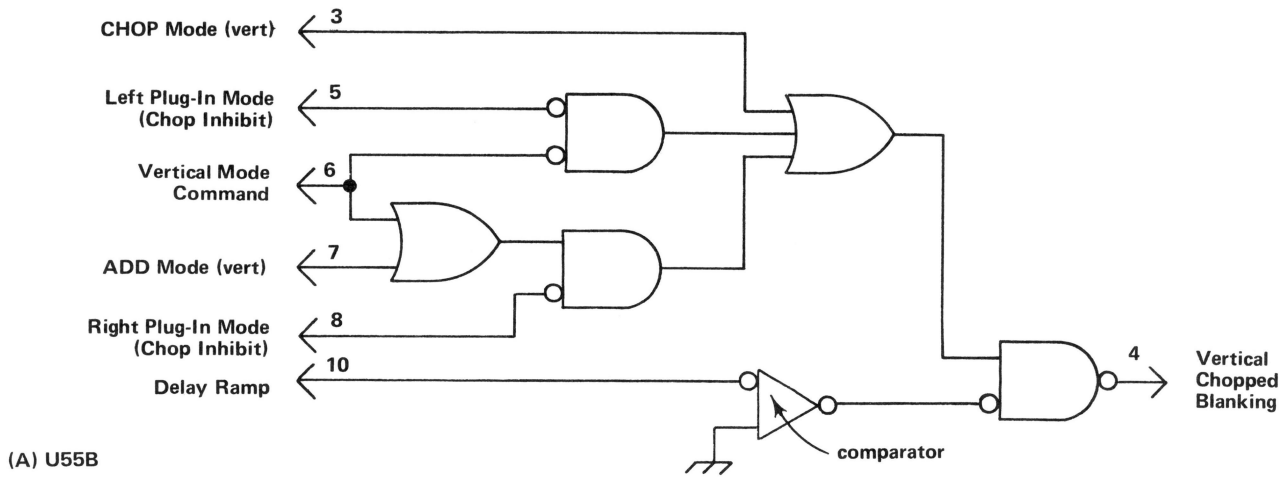

(A) U55B

(B)

Input						Output	
CHOP Mode (vert) 3	Left Plug-In Mode (Chop Inhibit) 5	Vertical Mode Command 6	Add Mode (vert) 7	Right Plug-In Mode (Chop Inhibit) 8	Delay Ramp 10[1]	Vertical Chopped Blanking 4[2]	Conditions
HI	Φ	Φ	LO	Φ	LO	LO	CHOP Mode (vert)
LO	LO	LO	LO	Φ	LO	LO	Left Plug-in Chopped
LO	Φ	HI	LO	LO	LO	LO	Right Plug-in Chopped
LO	LO[3]	Φ	HI	LO[3]	LO	LO	ADD Mode, Left or Right Plug-in Chopped
All other combinations						HI	No Vertical Chopped Blanking pulses at output.

Φ = Has no effect in this case.

[1] Ramp signal; considered LO when more negative than about zero volts.

[2] Negative-going pulse at two megahertz rate.

[3] Pin 5 can be HI and not affect operation if pin 8 is LO, and vice versa.

1463-14

Fig. 3-6. (A) Logic diagram for Vertical Chopped Blanking stage, (B) Table of input/output combinations for Vertical Chopped Blanking stage.

pulse produced by the Clock Generator stage provides the timing signal for this stage. A logic diagram of the Chop Counter, identifying the inputs and outputs, is shown in Fig. 3-7.

The Chop Counter stage consists of integrated circuit U123, a dual D-type flip-flop with direct-set, direct-clear inputs (see Table 3-1 for operation of D-type flip-flip). As connected in this circuit, these D-type flip-flops operate as triggered (toggle) flip-flops.

The two-megahertz clock pulses from the Clock Generator stage are connected to the trigger (T) input of U123B. As connected, U123B changes output states with each positive-going Clock pulse, and the signal at its "1" output is a square wave which switches between the HI and LO levels at a one-megahertz rate. This signal is connected to the Vertical Mode Control stage to provide the Vertical Mainframe Chop Signal. It is also connected to the trigger input of U123A. U123A also changes output states with each positive-going pulse at its trigger input to produce a 500 kilohertz square wave at its "1" output. The output from U123A provides the Vertical Plug-In Chop Signal to

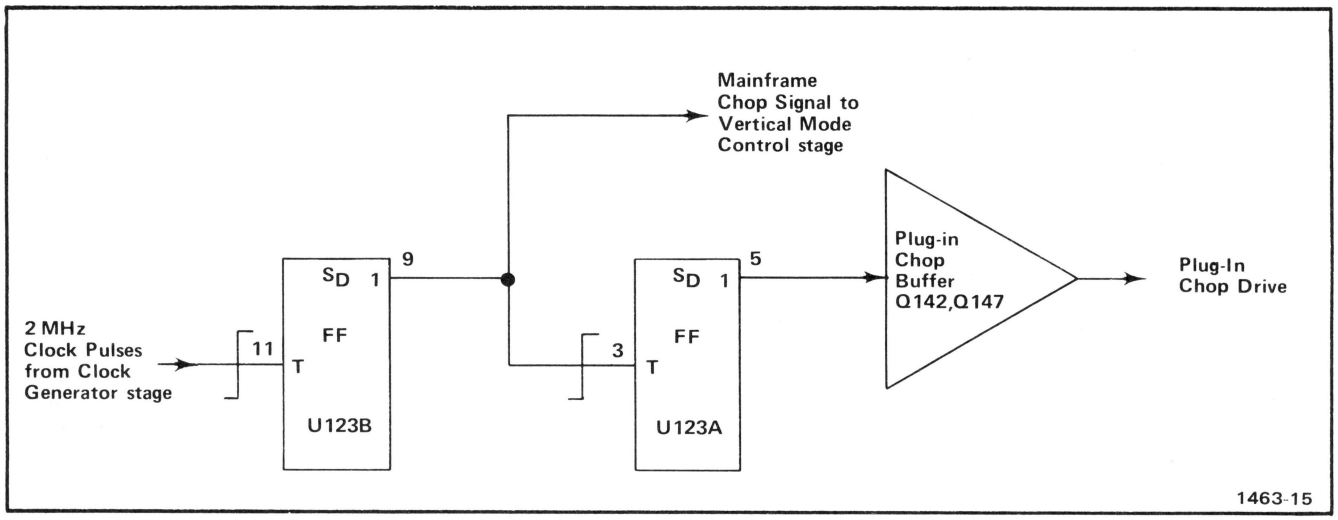

Fig. 3-7. Detailed logic diagram of Chop Counter stage.

the Plug-In Chop Buffer stage. Idealized waveforms showing the timing relationship between the input and output signals for this stage are shown in Fig. 3-8.

Vertical Mode Control

The Vertical Mode Control stage is made up of discrete components CR124-CR125, CR126, CR130-CR155, CR172, and buffer amplifier Q132-Q137. These components develop the Mainframe Vertical Mode Command which is connected to the Main Interface circuit (vertical plug-in compartments and trigger selection circuitry) and the Vertical Interface circuit to indicate which vertical unit is to be displayed. When this output level is HI, the right vertical unit is displayed and when it is LO, the left vertical unit is displayed.

The VERT MODE switch located on diagram 7 provides control levels for this stage. This switch provides a HI level on only one of four output lines to indicate the selected vertical mode; the remaining lines are LO. The fifth mode, LEFT, is indicated when all four output lines are LO. Operation of this stage in all positions of the VERT MODE switch is as follows:

Right. When the VERT MODE switch is set to RIGHT, a HI level is connected to the Buffer Amplifier through R126 and CR126. The LO level at the anodes of diodes CR125 and CR130 holds them reverse biased. The resultant Vertical Mode Command output from the Vertical Mode Buffer Amplifier is a HI level to indicate that the right vertical unit is to be displayed.

Chop. In the CHOP position of the VERT MODE switch, a HI level is applied to the anodes of diodes CR124-CR125 through R125. Both diodes are forward biased so the Vertical Chop Signal from pin 9 of U123B can pass to the emitter of Q132. This signal switches between the HI and LO levels at a one-megahertz rate and it produces a corresponding Mainframe Vertical Mode Command output at the emitter of Q137. When this output is

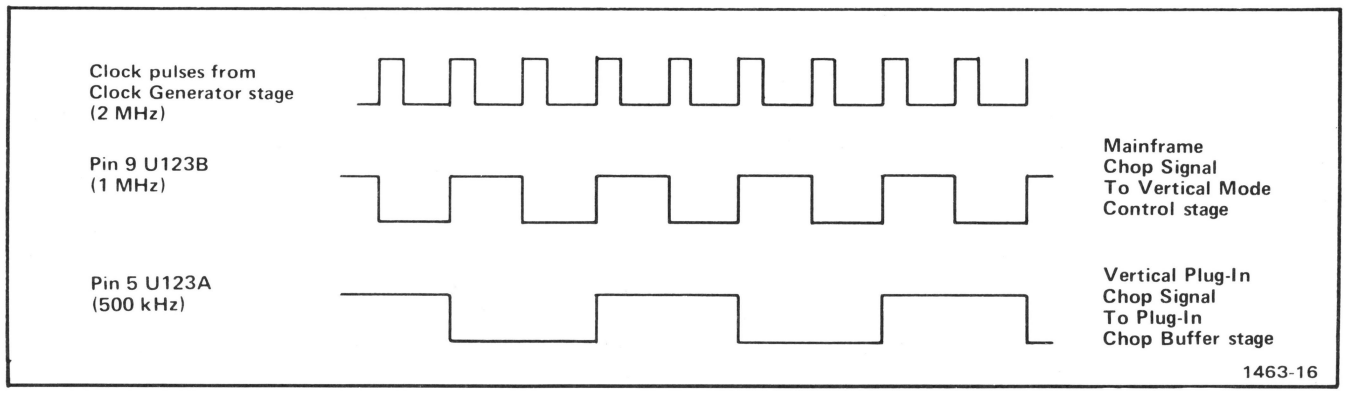

Fig. 3-8. Idealized input and output waveforms for Chop Counter stage.

HI, the right vertical unit is displayed and when it switches to LO, the left vertical unit is displayed.

Alt. In the ALT mode, the VERT MODE switch applies a HI level to the anodes of diodes CR130-CR155 through R130. These diodes are forward biased so the Display Right Command from pin 5 of U156A can pass to the emitter of Q132 to determine the Mainframe Vertical Mode Command level. The Display Right Command switches between its HI and LO levels at a rate determined by the Vertical Binary stage.

Add and Left. The control levels in the ADD and LEFT positions of the VERT MODE switch are not connected to this stage. However, since only the line corresponding to the selected vertical mode can be HI, the RIGHT, CHOP, and ALT lines must remain at their LO level when either LEFT or ADD are selected. Therefore, the emitter of Q132 remains LO to produce a LO Mainframe Vertical Mode Control output level. Final control of LEFT or ADD mode is made by the Vertical Interface circuit.

A logic diagram of the Vertical Mode Control stage is shown in Fig. 3-9. The discrete components which make up each logic function are identified. The gate connected to the input of the Vertical Mode Buffer Amplifier is a phantom-OR gate. A phantom-OR gate performs the OR logic function merely by interconnection of the three inputs.

Vertical Binary

The Vertical Binary stage consists of integrated circuit U156A and transistor Q150. U156A is a D-type flip-flop with direct-set and direct-clear inputs (see Table 3-1 for operating details). The connection between the "0" output and the data (D) input enables this flip-flop to operate in the triggered mode. A logic diagram of the Vertical Binary stage is shown in Fig. 3-10.

The operation of the Vertical Binary stage is controlled by the level of the ALT Mode line from the VERT MODE switch. When this switch is set to ALT, a HI level is connected to the emitter of Q150 through R152. This HI level disables Q150 so its collector remains HI. As a result, Q150 has no effect upon operation of the Vertical Binary stage and the direct-clear input of U156A remains HI so it does not affect the operation of U156A. Therefore, U156A operates as a basic triggered flip-flop which changes output states with each positive-going Sweep Holdoff pulse at the trigger (T) input. The Sweep Holdoff pulse goes positive at the end of each sweep. The signal at the "1" output of U156A switches between the HI and LO level at one-half the rate of the Sweep Holdoff signal from the horizontal plug-in unit. Fig. 3-11 shows the time relationship between the input and output signals for this stage, and gives the resultant display with each signal combination.

For any other position, the emitter of Q150 is pulled LO by the ALT Mode command from the VERT MODE switch. This enables Q150, but it does not change output state unless the level at the "1" output of U156A is HI. Quiescently, the output of Q150 is LO. Therefore, when the positive-going Sweep Hold-off pulse is received at the end of the sweep, the "1" output of U156A goes HI. This activates Q150 and its output goes LO to provide a direct-clear reset to U156A. The "1" output of U156A is reset to its LO level, and Q150 is again disabled so its output returns to the HI level. The stage is now ready for

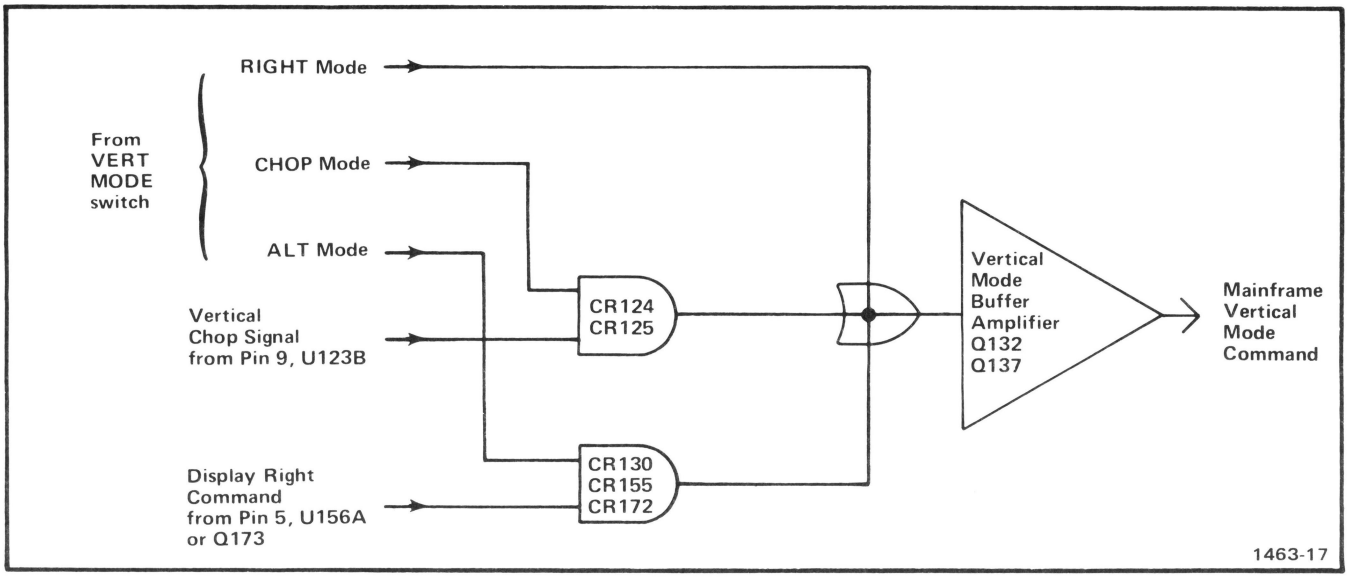

Fig. 3-9. Logic diagram of Vertical Mode Control and Vertical Mode Buffer Amplifier stages.

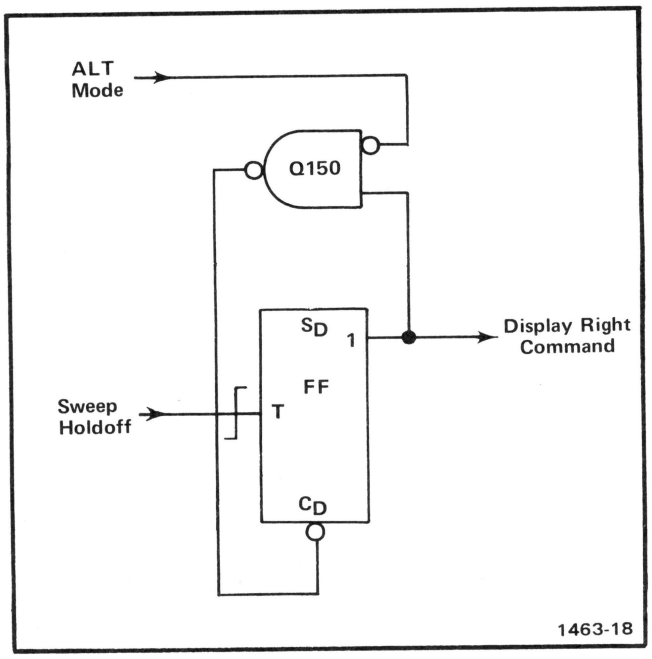

Fig. 3-10. Logic diagram of Vertical Binary stage.

the next positive-going Sweep Hold-off pulse. The action is the same with each pulse, so the signal at the output of this stage is at the same repetition rate as the Sweep Holdoff input. Therefore, this stage is now operating as a divide-by-one counter rather than a divide-by-two counter as described previously. The output under this condition is used only by the Plug-In Binary stage.

Since the Vertical Binary stage can change output states only at the end of each sweep, there will be no Alternate Drive signal for either the mainframe or vertical plug-in units if a sweep is not being produced by the horizontal plug-in unit.

Plug-In Binary

The Plug-In Binary stage consists of U156B, which is connected as a triggered flip-flop with direct-set input. The trigger input for this stage is the Display Right Command from the Vertical Binary stage. When the VERT MODE switch is set to ALT, the repetition rate of the Display Channel 2 Command output of this stage is one-fourth of the Sweep Holdoff input (see waveforms in Fig. 3-11). For any position of the VERT MODE switch except ALT, the repetition rate of the output signal from this stage is one-half of the Sweep Holdoff input. A logic diagram of the Plug-In Binary stage is shown in Fig. 3-12.

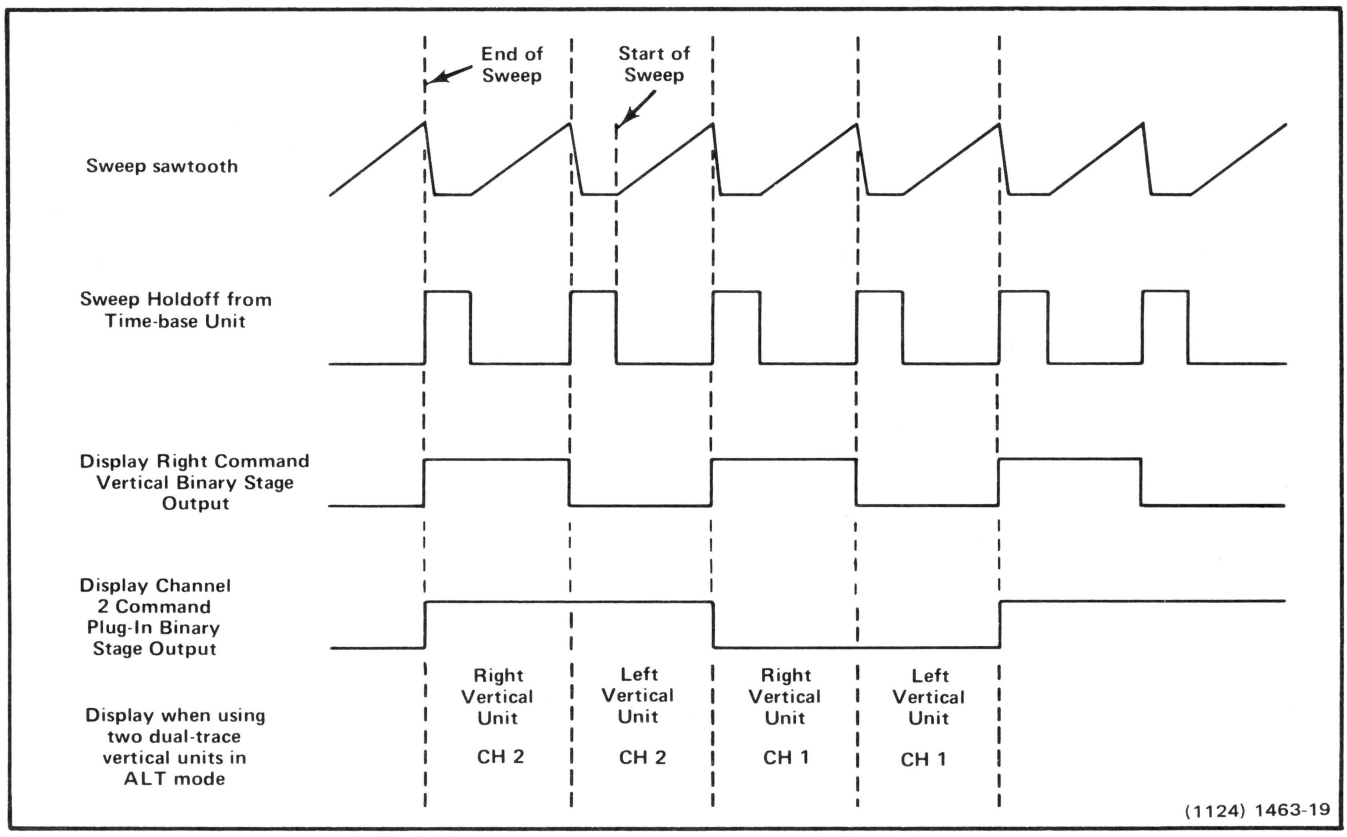

Fig. 3-11. Idealized waveforms showing relationship between input and output waveforms for Vertical Binary and Plug-In Binary stages when operating in ALT mode.

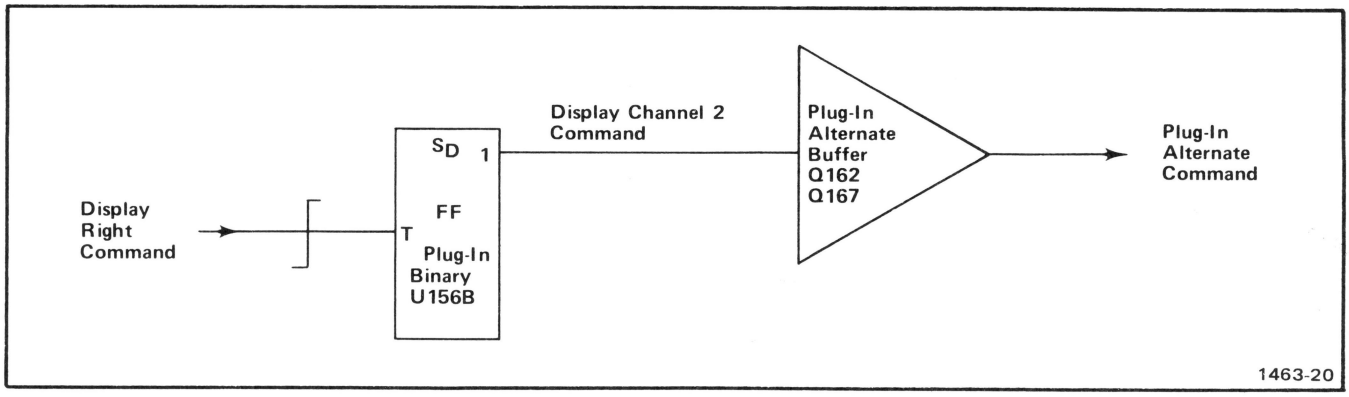

Fig. 3-12. Logic diagram of Plug-In Binary and Plug-In Alternate Buffer stages.

Output Buffers

The output switching commands from the Logic circuit are provided through buffer stages Q142-Q137, Q142-Q147, Q162-Q167, and Q182-Q187. Each of these stages includes a common-base input transistor to provide a low-impedance load for the associated driving stages. The output transistor is connected as an emitter-follower to provide isolation between the Logic circuit and other circuits within this instrument or the plug-in units.

TRIGGER SELECTOR

The Trigger source switch determines which vertical signal is connected to the time-base unit, and which vertical signal, that is provided at VERT SIG/OUT connector on the rear panel. Fig. 3-13 shows a detailed block diagram of the Trigger Selector circuit, along with a simplified diagram of all the circuitry involved in selection of the trigger source. A schematic of the Trigger Selector circuit is shown on diagram 3 at the rear of this manual. Also, see diagrams 6 and 7 for the signal selection circuitry not shown on diagram 3.

Trigger Mode and Add Signals

General. The circuitry shown on the left side of the simplified diagram in Fig. 3-13 determines the operation of the Trigger Channel Switch stage. TRIG SOURCE switch S1011 controls Trigger Channel Switch U324 through Q314. When the TRIG SOURCE switch is set to the VERT MODE position, the setting of the VERT MODE switch determines the trigger selection. In the LEFT or RIGHT positions, the trigger signal is obtained from the indicated vertical unit. The following discussions give detailed operation in each position of the TRIG SOURCE switch.

Vert Mode. In the VERT MODE position of the TRIG SOURCE switch, the setting of the VERT MODE switch determines the operation of the Trigger Channel Switch stage. In the LEFT position of the VERT MODE switch, the base of Q314 is connected to ground through the ALT and RIGHT sections of S1021, CR1021 and CR1026, and S1011. This holds Q314 reverse biased to provide a LO level to pin 4 of U324 (see Fig. 3-14).

When the VERT MODE switch is set to ALT, +5 volts is applied to the base of Q314 through CR1021 and S1011. Q314 is forward biased and its emitter level is determined by the Mainframe Vertical Mode Command signal from the Logic circuit applied to its collector. This signal switches between the HI level (Right Vertical unit to be displayed) and the LO level (Left Vertical unit to be displayed) at the end of each sweep. When the Mainframe Vertical Mode Command is HI, it provides a positive collector voltage to Q314. Q314 is saturated due to CR1021, and its emitter level is very near the collector level. This provides a HI output level to the Trigger Channel Switch stage. As the Mainframe Vertical Mode Command goes LO, the collector supply for Q314 also goes negative. Q314 remains saturated and the output again follows the collector level to supply a LO output level to U324.

For ADD and CHOP vertical mode operation, +5 volts is connected to pin 14 of U324 through CR1023 or CR1024 and S1011. At the same time, the base of Q314 is held LO by the ground connection through the ALT and RIGHT section of S1021 so the level at pin 4 of U324 is LO also (produces an ADD mode in Trigger Channel Switch; see description of this circuit which follows). In the RIGHT position of the VERT MODE switch, +5 volts is connected to the base of Q314 through CR1026 and S1011 to forward-bias the transistor. The Mainframe Vertical Mode Command signal connected to the collector of Q314 is also HI in this mode, and a HI output level is produced at the emitter of Q314.

Left. When the LEFT trigger source is selected, the VERT MODE switch is disconnected from the trigger selector circuitry. Now the ground connection through the

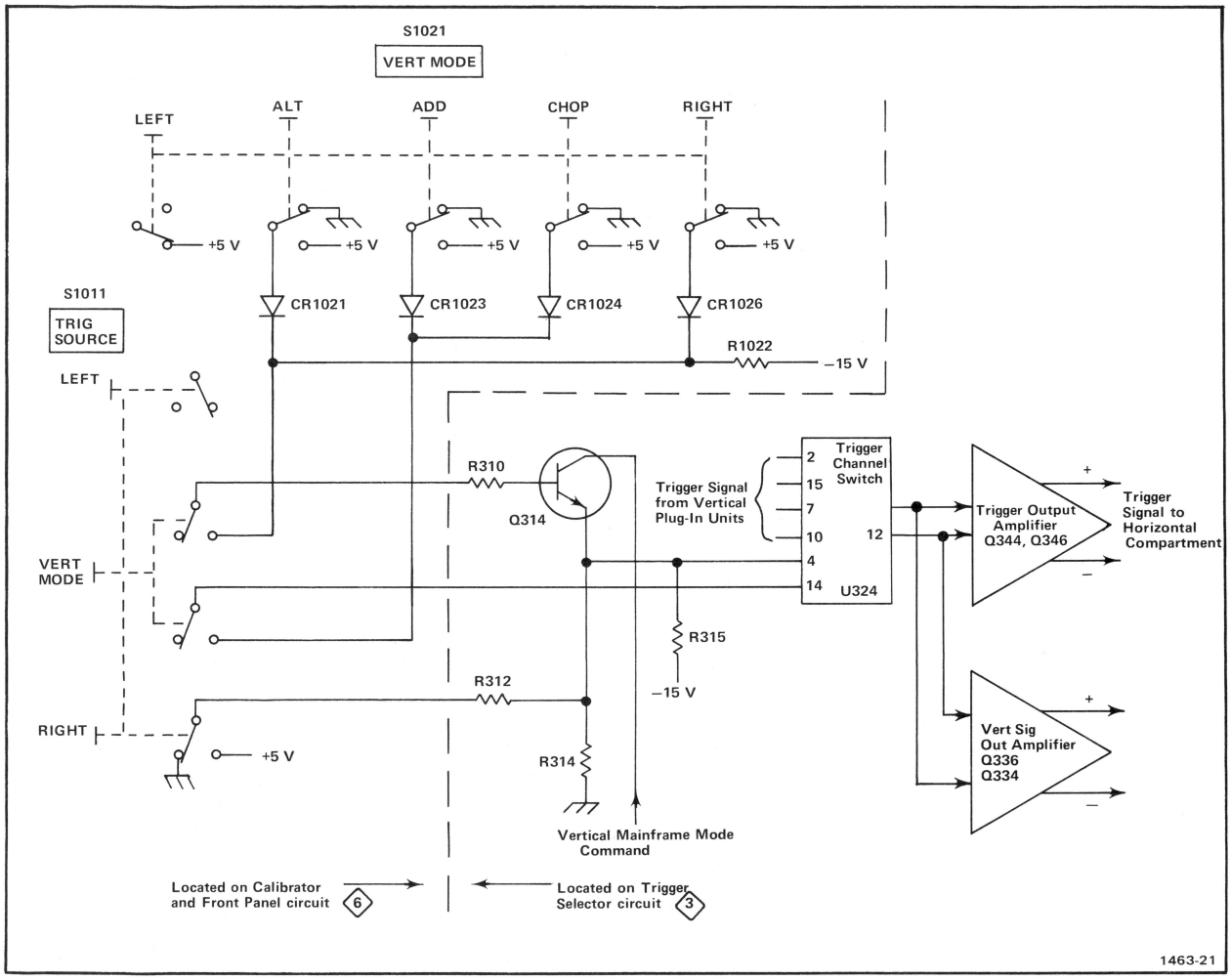

Fig. 3-13. Detailed block diagram of Trigger Selector circuit along with simplified diagram of trigger source selection circuitry.

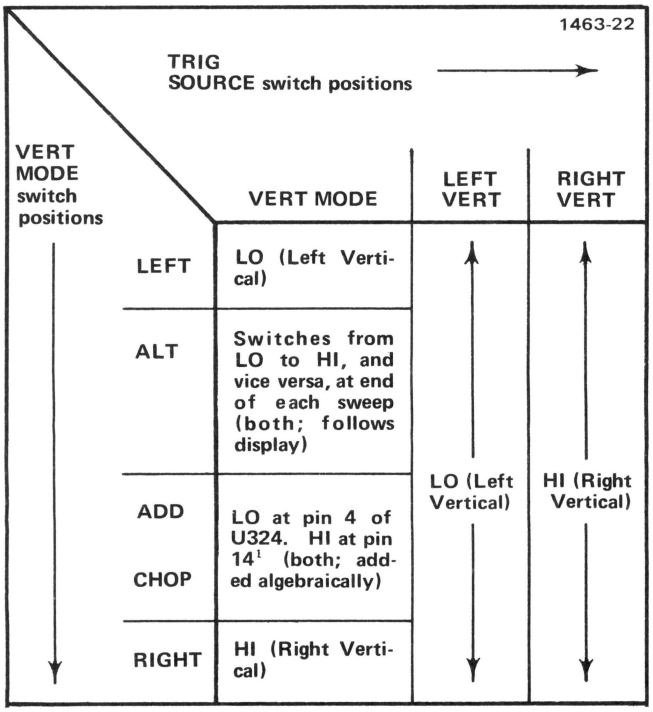

[1] Pin 14 LO for all other conditions.

Fig. 3-14. Input levels at pin 4 of U324 (source of triggering is shown in parenthesis).

RIGHT section of S1011 establishes a LO output level at the emitter of Q314.

Right. In the RIGHT position of the TRIG SOURCE switch, +5 volts is connected to the emitter of Q314 through S1011 and R312. This produces a HI output level to the Trigger Channel Switch stage.

Trigger Channel Switch

The Trigger Channel Switch stage determines which input signal provides the trigger signal to the horizontal compartment as controlled by the Trigger Mode and ADD signals from the trigger selection circuitry. Refer to diagram 3 during the following discussion.

Resistors R317-R319 establish the input resistance and provide a load for the trigger signal from the right vertical plug-in unit. Resistors R307 and R308 provide the input resistance and load for the left vertical plug-in unit. R321-R323-R324 and R326-R327-R328 establish the operating level of the Trigger Channel Switch; R321-R323 and R326-R328 set the current gain for each channel. This stage is made up primarily of integrated circuit U324. An input/output table for U324 is shown in Fig. 3-15. U324 provides a high impedance differential input for the trigger signal from the left vertical unit at pins 2 and 15, and for the trigger signal from the right vertical unit at pins 7 and 10. The output signal at pins 12 and 13 is a differential signal. The sum of the DC current at pins 12 and 13 is always equal to the sum of the DC currents at pins 1, 8, 9, and 16 in all modes. This provides a constant DC bias to the stages which follow as the TRIG SOURCE or the VERT MODE switches are changed.

When the level at pin 4 is LO (see Trigger Mode and ADD Signals discussion and Fig. 3-15), the trigger signal from the left vertical unit passes to the output, while the trigger signal from the right vertical unit is blocked. A HI level at pin 4 connects the trigger signal from the right vertical unit to the output and the trigger signal from the left vertical unit is blocked. For VERT MODE operation in the ALT position of the VERT MODE switch, the level at pin 4 switches between the LO and HI level at a rate determined by the Vertical Binary stage (see Logic circuit description). This action obtains the trigger signal from the left vertical unit when the left vertical unit is being displayed and from the right vertical unit when it is being displayed.

When the level at pin 4 is LO and the level at pin 14 is HI, the trigger signal from both the left and right vertical units passes to the output pins. This condition occurs only when the TRIG SOURCE switch is set to VERT MODE and the VERT MODE switch is set to either ADD or CHOP. Under this operating mode, the trigger output signal is the algebraic sum of the trigger input signals from the left and right vertical units to prevent triggering on the vertical chopping transition, or only on one signal of an added display.

Trigger Output Amplifier

The trigger output at pins 12 and 13 of U324 is connected to the bases of Q344-Q346 to provide the internal trigger signal for the horizontal unit (via the Main Interface circuit). The horizontal unit provides a 50-ohm differential load for this stage. If it is removed from its compartment, the collector load for Q344-Q346 changes and the voltage at their collectors increases. This stage prevents this change from affecting the vertical signal for the Output Signals board. CR341-CR349 clamp the collectors of Q344 and Q346 at about +0.6 volt to prevent these transistors from saturating under this no-load condition.

Vertical Signal Buffer

The trigger output signal at pin 12 and 13 of U324 is also connected to the emitter of a common-base amplifier Q336 and Q334. The output signal at the collector of Q336 and Q334 is connected to the signals out board.

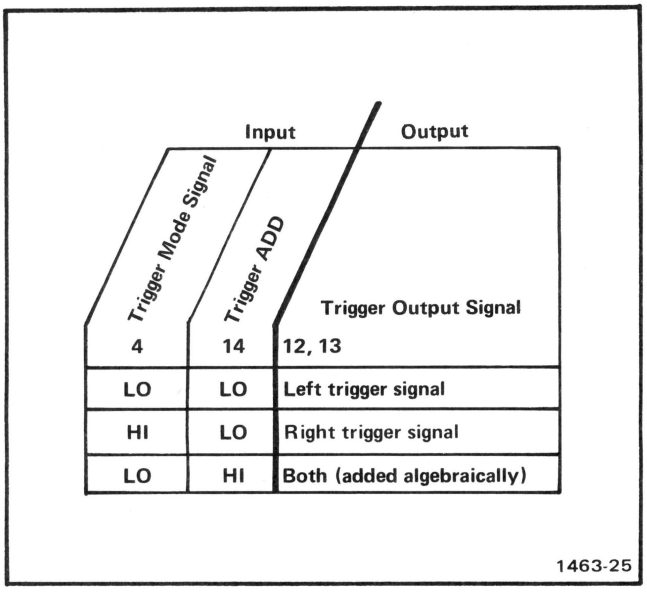

Fig. 3-15. Input/output table for Trigger Channel Switch stage.

VERTICAL INTERFACE
For Instruments SN B150000-Above

The Vertical Interface circuit selects the vertical deflection signal from the output of the left vertical of the right vertical plug-in unit. Figure 3-16A shows a detailed block diagram of the Vertical Interface circuit. A schematic of this circuit is shown in the diagram section of this manual.

Vertical Channel Switch

The Vertical Channel Switch stage (controlled primarily by the Mainframe Vertical Mode Command from the Logic circuit) determines which vertical signal is to be sent to the Delay-Line Driver stage. Resistors R2333-R2335 and R2337-R2339 establish the input resistance of this stage and provide a load for the left and right vertical units. Resistors R2347-R2349 and R2357-R2359-R2329 establish the operating levels for this stage. R2343 and R2353 set the current gain for each channel. C2345-F2345 and C2355-R2355 provide frequency compensation.

The Vertical Channel Switch stage is made up primarily of integrated circuit U2340, which is the same type as used for the Trigger Channel Switch. An input/output table for U2340 is shown in Fig. 3-17. U2340 provides a high impedance differential input for the signal from the left vertical unit at pins 2 and 15, and the signal from the right vertical unit at pins 7 and 10. The output signal at pins 12 and 13 is differential signal that is connected to the Delay-Line Driver stage through R2366-R2376. The sum of the DC output currents at pins 12 and 13 is always equal to the sum of the DC input currents at pins 1, 8, 9, and 16 in all modes. This provides a constant DC bias to the following stage as the VERT MODE switch is changed.

When the VERT MODE switch is set to LEFT, the level at pin 4 is LO. This level allows the signal from the left vertical unit to pass to the output while the signal from the right vertical unit is blocked. In the RIGHT position of the VERT MODE switch, the level at pin 4 is HI. Now, the signal from the right vertical unit is connected to the output while the signal from the left vertical unit is blocked.

When the VERT MODE switch is set to either ALT or CHOP, the Mainframe Vertical Mode Command at pin 4 switches between the LO and HI levels at a rate determined by either the Chop Counter or the Vertical Binary stages (see Logic circuit description). This action allows the signal from the left vertical unit to be displayed when the Mainframe Vertical Mode Command is LO and the signal from the right vertical unit is displayed when the Mainframe Vertical Mode Command is HI. When ADD vertical mode operation is selected, a HI level is applied to pin 14 and the level at pin 4 is LO as determined by the Vertical Mode Control stage in the Logic Circuit. This allows both the right and left vertical signals to pass to the output pins. Now, the signal from both vertical units is algebraically added and the resultant signal determines the vertical deflection.

The X/Y inhibit signal from the Readout system is applied to pin 6 of U2340. It has final control over the output signal from U2340. Quiescently, the X/Y Inhibit signal is LO and the signal from the selected vertical can pass to the output pins 12 and 13. However, when the Readout system is ready to display Readout information, the level at pin 6 goes HI. This level blocks the signals from both vertical compartments and there is no signal output from U2340 under this condition. Transistor Q2390 will conduct and provide about the same current for the output stage as under normal conditions. This limits any change in positioning that would otherwise occur when the X/Y Inhibit signal is applied from the Readout system.

Auxiliary Y-Axis Input Amplifier

The Auxiliary Y-Axis Input Amplifier accepts an input from horizontal plug-in units having compatible features. Normally, this input is a positioning voltage to offset the display. The single-ended signal connected to the input of this stage is converted to a push-pull signal at the collectors of Q2365 A and B. This signal is connected to the Delay-Line Buffer stage along with the output from the Vertical Channel Switch.

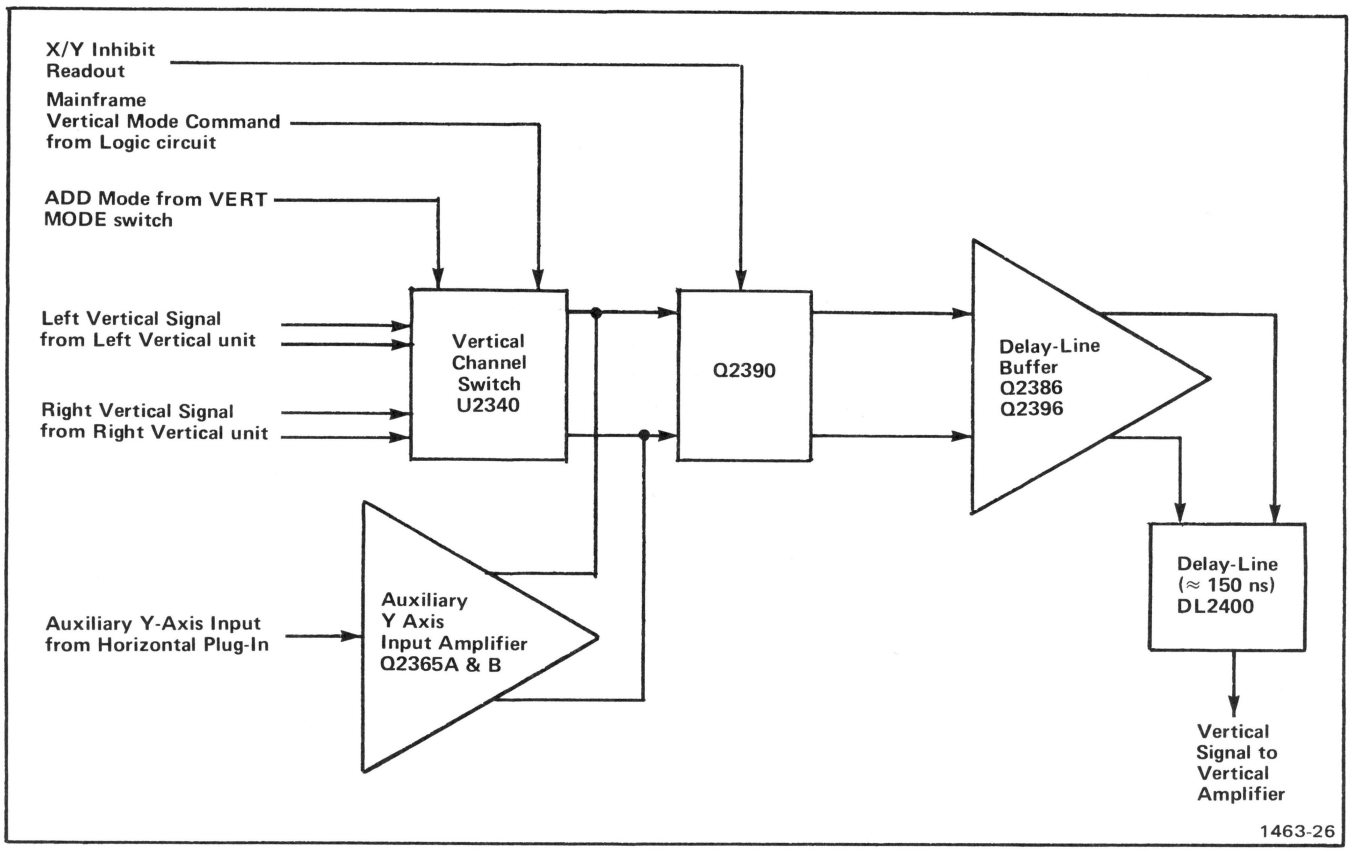

Fig. 3-16A. Vertical Interface detailed block diagram for SN B150000-above.

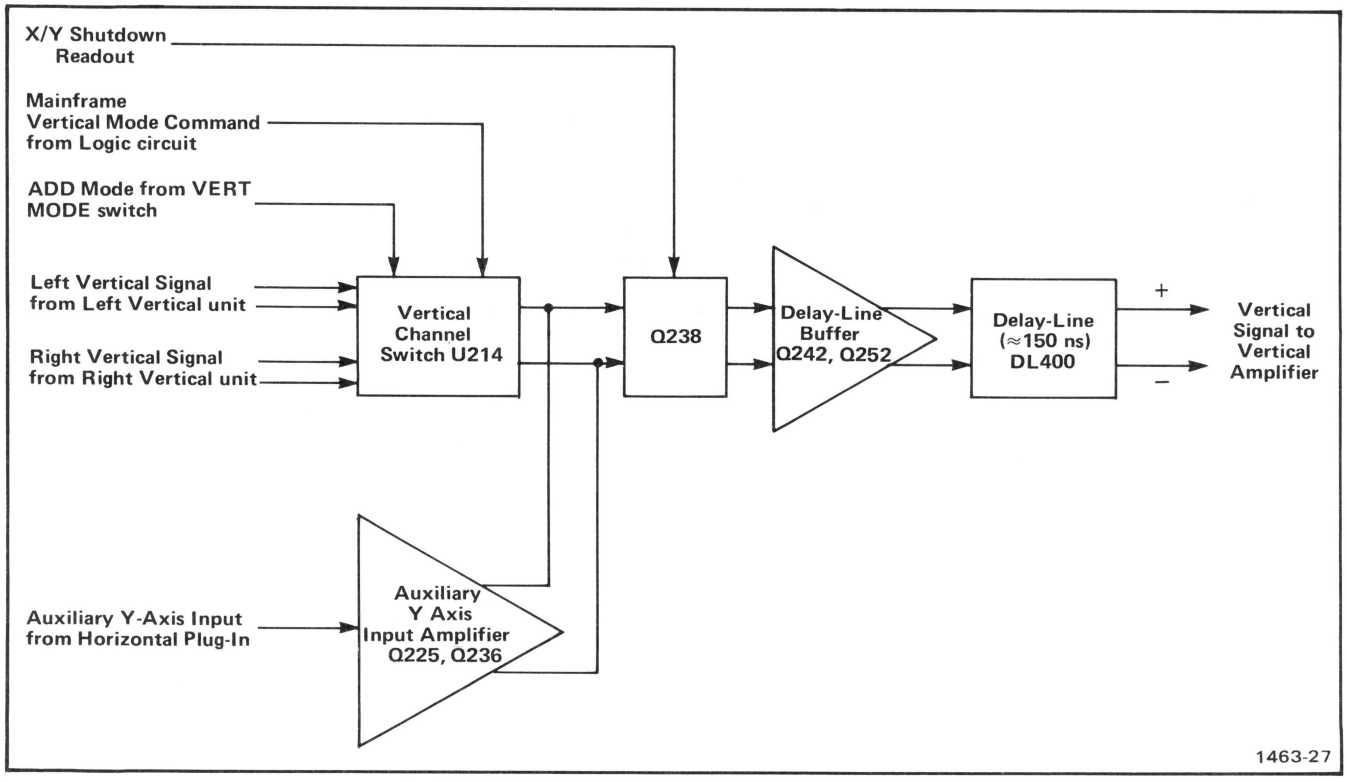

Fig. 3-16B. Vertical Interface detailed block diagram for SN B149999-below.

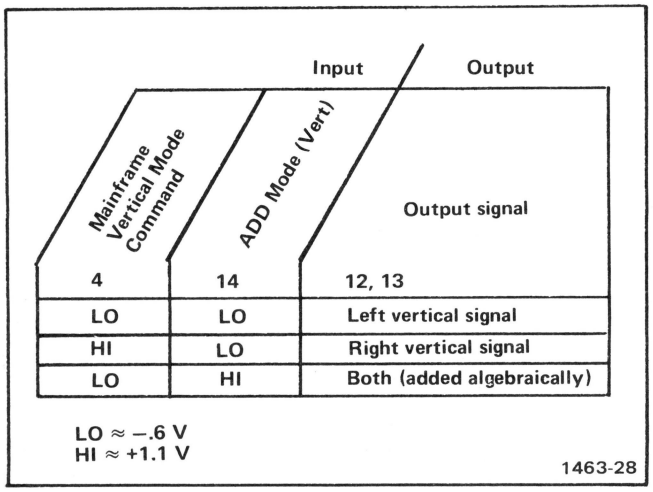

Fig. 3-17. Input/output table for Vertical Channel Switch.

Delay-Line Buffer

The output of the Vertical Channel Switch stage, along with any signal from the Auxiliary Y Axis Input Amplifier, is connected to the bases of Q2386 and Q2396. These transistors are connected in a common emitter shunt feedback configuration to provide a low impedance summing point, and voltage gain. L2386-L2396, C2387-R2387 and C2397-R2397 provide high-frequency peaking and reverse termination for the Delay Line.

Delay Line

Delay Line DL 2400 provides approximately 150 nanoseconds delay for the vertical signal, to allow the horizontal circuits time to initiate a sweep before the vertical signal reaches the vertical deflection plates of the CRT. This allows the instrument to display the leading edge of the signal originating the trigger pulse when using internal triggering. The delay line used in this instrument has a characteristic impedance of about 50 ohms per side, or about 100 ohms differentially. It is of the coaxial type, which does not produce preshoot or phase distortion in the CRT display.

VERTICAL INTERFACE
For Instruments SN B149999-Below

The Vertical Interface circuit selects the vertical deflection signal from the output of the left vertical or the right vertical plug-in unit. Figure 3-16B shows a detailed block diagram of the Vertical Interface circuit. A schematic of this circuit is shown on diagram 3 at the rear of this manual.

Vertical Channel Switch

The Vertical Channel Switch stage determines which input signal provides the vertical signal to the Delay-Line Driver stage as controlled by the Mainframe Vertical Mode Command from the Logic circuit. Resistors R200-R202 and R204-R206 establish the input resistance of this stage and provide a load for the left and right vertical units. Resistors R209-R211-R212 and R216-R218-R219 establish the operating levels for this stage. R209-R212 and R216-R219 set the current gain for each channel. C208-R208 and C215-R215 provide frequency compensation.

This stage is made up primarily of integrated circuit U214, which is the same type as used for the Trigger Channel Switch. An input/output table for U214 is shown in Fig. 3-17. U214 provides a high impedance differential input for the signal from the left vertical unit at pins 2 and 15, and the signal from the right vertical unit at pins 7 and 10. The output signal at pins 12 and 13 is a differential signal which is connected to the Delay-Line Driver stage through R222-R224. The sum of the DC output currents at pins 12 and 13 is always equal to the sum of the DC input currents at pins 1, 8, 9, and 16 in all modes. This provides a constant DC bias to the following stage as the VERT MODE switch is changed.

When the VERT MODE switch is set to LEFT, the level at pin 4 is LO. This level allows the signal from the left vertical unit to pass to the output while the signal from the right vertical unit is blocked. In the RIGHT position of the VERT MODE switch, the level at pin 4 is HI. Now, the signal from the right vertical unit is connected to the output while the signal from the left vertical unit is blocked.

When the VERT MODE switch is set to either ALT or CHOP, the Mainframe Vertical Mode Command at pin 4 switches between the LO and HI levels at a rate determined by either the Chop Counter or the Vertical Binary stages (see Logic circuit description). This action allows the signal from the left vertical unit to be displayed when the Mainframe Vertical Mode Command is LO and the signal from the right vertical unit is displayed when the Mainframe Vertical Mode Command is HI. When ADD vertical mode operation is selected, a HI level is applied to pin 14 and the level at pin 4 is LO as determined by the Vertical Mode Control stage in the Logic Circuit. This allows both the right and left vertical signals to pass to the output pins. Now, the signal from both vertical units is algebraically added and the resultant signal determines the vertical deflection.

The X/Y Shutdown signal from the Readout system is applied to pin 6 of U214. It has final control over the output signal from U214. Quiescently, the X/Y Shutdown signal is LO and the signal from the selected vertical can pass to the output pins 12 and 13. However, when the Readout system is ready to display Readout information, the level at pin 6 goes HI. This level blocks the signals from both vertical compartments and there is no output from U214 under this condition. Transistor Q238 will conduct and provide about the same current for the output stage as under normal conditions. This limits any change in positioning that would otherwise occur when the X/Y Shutdown signal from the Readout system is applied.

Auxiliary Y-Axis Input Amplifier

The Auxiliary Y-Axis Input Amplifier accepts an input from horizontal plug-in units having compatible features. Normally, this input is a positioning voltage to offset the display. The single-ended signal connected to the input of this stage is converted to a push-pull signal at the collectors of Q225 and Q236. This signal is connected to the delay-Line Buffer stage along with the output from the Vertical Channel Switch.

Delay-Line Buffer

The output of the Vertical Channel Switch stage, along with any signal from the Auxiliary Y-Axis Input Amplifier, is connected to the emitters of Q242-Q252. These transistors are connected as common-base amplifiers to provide a low-impedance current-summing point. The signal at the collectors of Q242-Q252 is connected to Delay Line DL400. Resistor R260 provides reverse termination for the Delay Line.

Delay Line

Delay Line DL400 provides approximately 150 nanoseconds delay for the vertical signal, to allow the horizontal circuits time to initiate a sweep before the vertical signal reaches the vertical deflection plates of the CRT. This allows the instrument to display the leading edge of the signal originating the trigger pulse when using internal triggering. The delay line used in this instrument has a characteristic impedance of about 50 ohms per side, or about 100 ohms differentially. It is of the coaxial type, which does not produce preshoot or phase distortion in the CRT display.

VERTICAL AMPLIFIER
For Instruments SN B150000-Above

The Vertical Amplifier circuit provides final amplification for the vertical signal before it is applied to the vertical deflection plates of the CRT. This circuit includes an input from the BEAM FINDER switch to compress an overscanned display within the viewing area of the CRT. Figure 3-18A shows a detailed block diagram of the Vertical Amplifier circuit. A schematic of this circuit is in the diagram section of this manual.

Centering and Readout Amplifier

Q2530-Q2430 compose a paraphase amplifier to provide balance or centering control for the vertical amplifier by changing the ratio of the current that is summed at the emitters of Q2441-Q2541. In addition this stage provides the input for the vertical readout signal through J2534 and the base of Q2530.

Input Amplifier

Forward termination of the delay line is accomplished by R2402-R2501, in conjunction with the input impedance of Q2405-Q2505. R2402-R2501 also acts as load resistors for the Delay Line Buffer stage. Q2405-Q2441-Q2505-Q2541 are connected in a cascode configuration. The RC networks in the emitters of Q2405-Q2505 compensate for the losses in the delay line and provide some temperature compensation for the vertical amplifier.

Thermal balancing of the vertical amplifier is accomplished by adjusting the base voltage of Q2441-Q2541.

The signal from Q2441-Q2541 is connected to the output amplifier through the transmission line, which is terminated by L2448-L2548 and R2448-R2548. The Vertical Gain is adjusted by loading the collectors of Q2441-Q2541 with R2446.

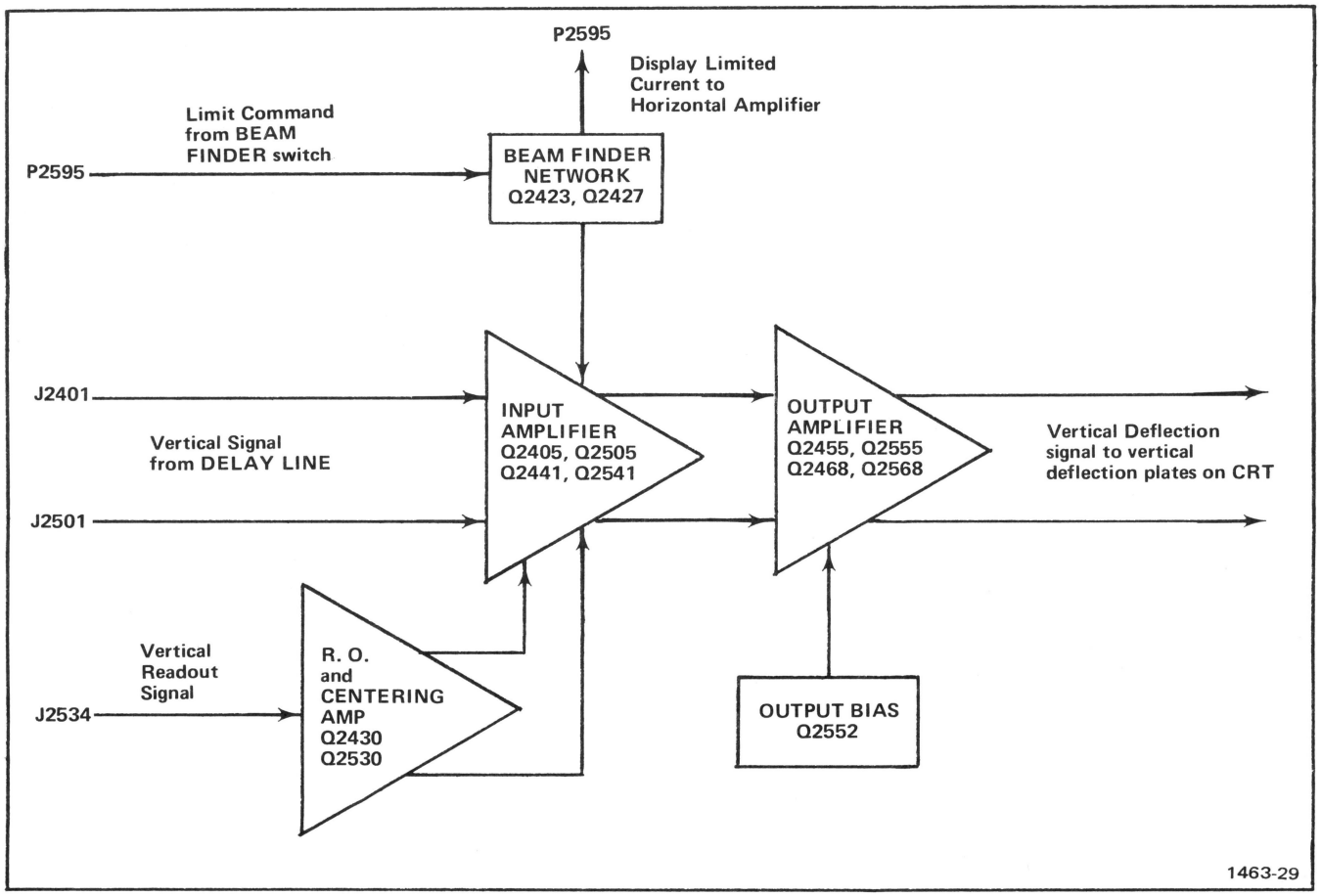

Fig. 3-18A. Vertical Amplifier detailed block diagram for SN B150000-above.

Output Amplifier

The output cascode amplifier is driven through "T coils" to increase high-frequency gain. High-frequency compensation is provided by C2456 and the varactor network in the emitters of Q2455-Q2555.

Output common base stage Q2468-Q2568 is driven through the RC matching networks between the collectors of Q2455-Q2555 and emitters of Q2468-Q2568. The output signal at the collectors of Q2468-Q2568 provides the vertical deflection signal for the CRT. LR networks provide peaking to overcome the effects of CRT plate capacity and prevent oscillations in the output transistors.

Beam Finder Network

The Beam Finder Network provides a means of locating a display that overscans the graticule area. Under nomal operation, the Display Limit Command is at −15 volts, which holds Q2427 cut off and allows Display Limit Current for the Horizontal Amplifier to rise to about +15 volts. During this time, Q2423 is held on and emitter current from Q2405-Q2505 flows through Q2423 to ground. When the Beam Finder switch is pressed, the Display Limit Command rises positive, turning Q2427 on and Q2423 off. This pulls the Display Limit Current to −15 volts, and reduces the emitter current of Q2405-Q2505 to a level that limits the dynamic range of the input stage. R2523-R2524 serve to maintain the proper common mode voltage at the output of the amplifier when BEAM FINDER is used.

VERTICAL AMPLIFIER
For Instruments SN B149999-Below

The Vertical Amplifier circuit provides final amplification for the vertical signal before it is applied to the vertical deflection plates of the CRT. This circuit includes an input from the BEAM FINDER switch to compress an overscanned display within the viewing area of the CRT. Figure 3-18B shows a detailed block diagram of the Vertical Amplifier circuit. A schematic of this circuit is shown on diagram 4 at the rear of this manual.

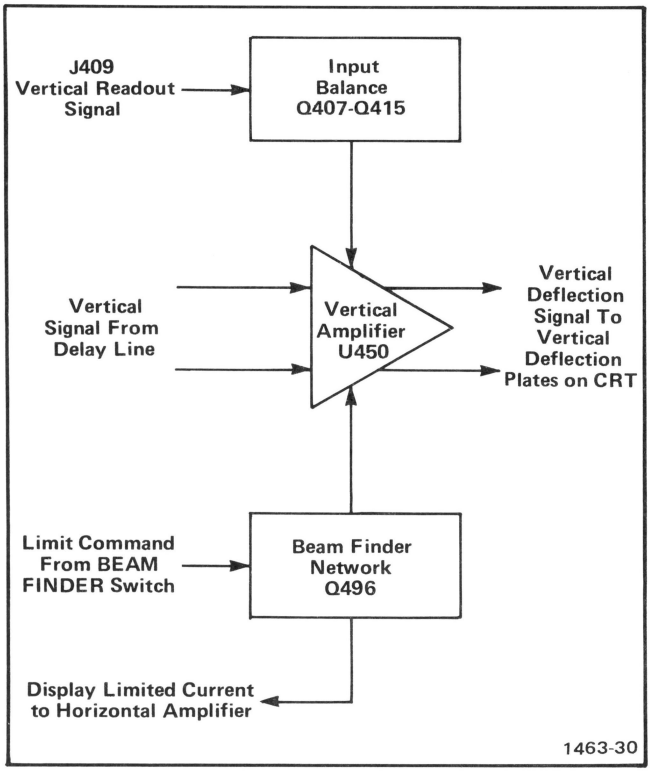

Fig. 3-18B. Vertical Amplifier detailed block diagram for SN B149999-below.

Input Balance

Q407-Q415 comprise a paraphase amplifier to provide input balance for the Vertical Amplifier by changing the DC levels at pins 2 and 4 of U450. Vertical Centering adjustment R403 determines the bias at the base of Q407. As this bias is changed, the levels at the collectors of Q407 and Q415 change due to paraphase action. This DC level is connected to pin 2 of U450 through R408-R423 and to pin 4 through R414-R424. R403 is adjusted so the trace is displayed at the center of the CRT when the inputs to this circuit are at the same potential.

The input to the base of Q407 through J409 is used for Vertical readout signal.

Output Amplifier

Amplification of the vertical signal is accomplished by integrated circuit U450. The circuit shown within the shaded area is a representation of the circuit contained within U450. Notice that the circuit is made up of three similar push-pull stages. Each stage has a pair of common emitter transistors driving a pair of low input impedance common base transistors. Frequency compensation is provided by the networks connected between pins 2 and 4 in the first amplifier stage and pins 7 and 8, 13 and 14 in the third amplifier stage. The resistive network connected to pins 3, 6, and 16 determines the gain of the Vertical Amplifier. Vertical Gain adjustment R447 sets he gain of the second amplifier stage to determine the overall gain of the vertical deflection system and thereby provide a calibrated deflection factor. Bias adjustment R486 sets the voltage level at pin 10 of U450 (nominally 4.3 volts) to balance the third amplifier stage for maximum gain-bandwidth operation.

Beam Finder Network

The Beam Finder Network, consisting of transistor Q496 and associated components, provides a means of locating a display which overscans the graticule area. Under normal operation, −15 volts is connected to the base of Q496 from the BEAM FINDER switch (see diagram 7) to reverse bias it. Therefore, the normal operating levels for U450 are determined by the resistive network connected to pin 3, 6, and 16. When the BEAM FINDER switch is pressed, the −15 volts is interrupted and the base of Q496 rises positive to turn it on. The resulting change in current of U450 unbalances the second amplifier stage so as to limit its gain. This action compresses the display vertically within the display area.

HORIZONTAL AMPLIFIER

The Horizontal Amplifier circuit amplifies the push-pull horizontal deflection signals from the plug-in unit in the horizontal compartment and connects it to the horizontal deflection plates of the CRT. Fig. 3-19 shows a detailed block diagram of the Horizontal Amplifier circuit. A schematic of this circuit is shown on diagram 5 at the rear of this manual.

Horizontal Channel Switch

The horizontal signals from the plug-in unit in the horizontal compartment are connected to pin 2 and pin 15 of U510. Integrated circuit U510 determines which input signal will provide the signal for the Horizontal amplifier circuit as controlled by the X/Y Shutdown signal from the Readout system. When the X/Y Shutdown is LO, the signal from horizontal compartment is passed to the output of U510. When the X/Y Shutdown is high, the Readout signal is passed to the output of U510. Resistors R514, R515, R521, and R522 establish the operating levels for this circuit. R512 adjusts the circuit gain. R511 and R513 establish the range for the gain adjustment (see Trigger Channel Switch under TRIGGER SELECTOR in this section).

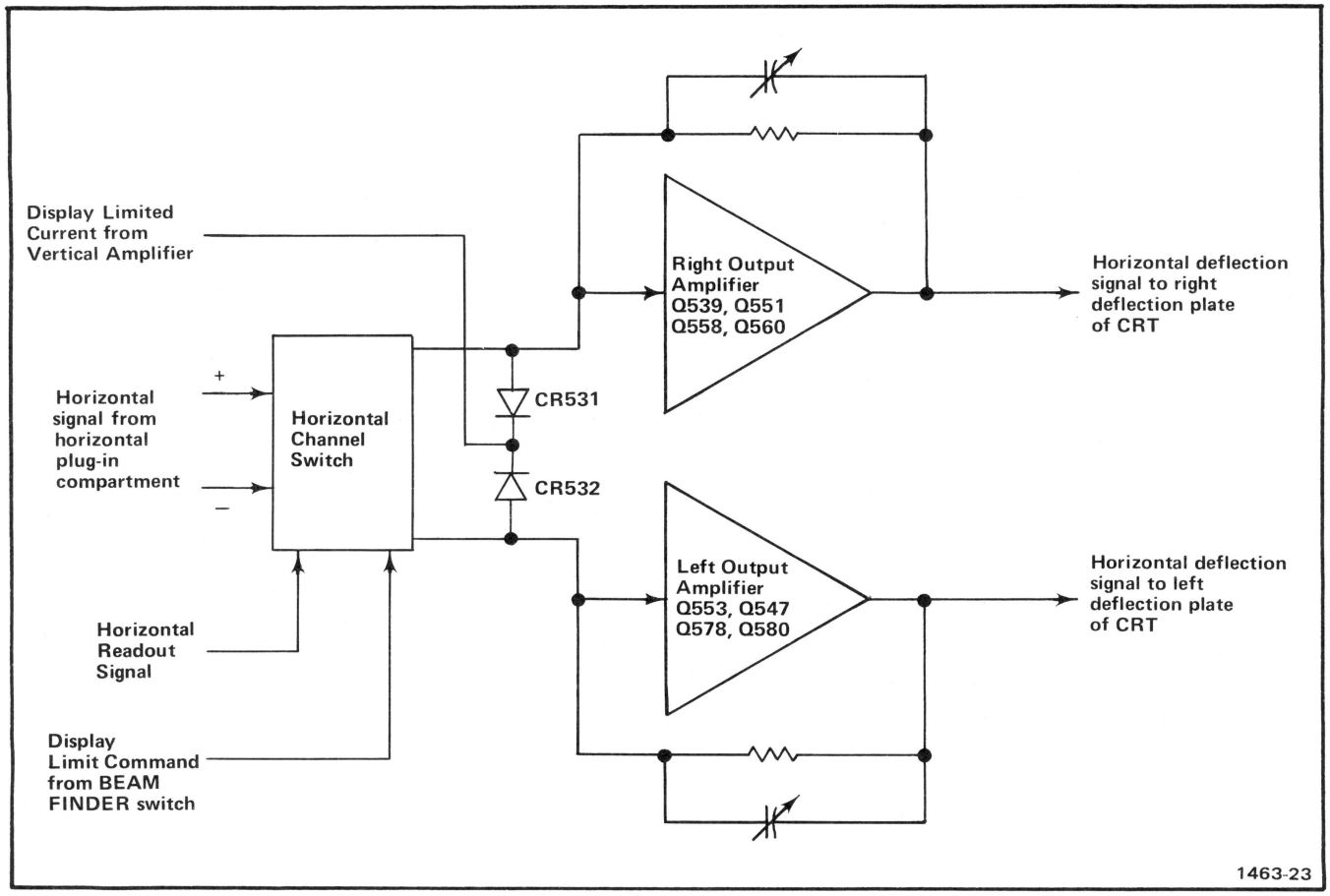

Fig. 3-19. Horizontal Amplifier detailed block diagram.

For normal operation, the gain and current level resistors are connected to the Display Limit Command line. The Display Limit Command is connected to the −15 supply through the BEAM FINDER switch. When the BEAM FINDER switch is actuated, the −15 volt is interrupted to limit the current to U510. At the same time, current is added through CR531 and CR532 from the display limited current line. This added current maintains about the same DC currents through the output circuit in both positions of the BEAM FINDER switch. The signal at the output is connected to the right and left amplifier inputs. Resistor R525 adjusts the amplifier for center screen deflection in the absence of an input signal to U510.

Output Amplifier

Transistors Q539, Q551, Q558, and Q560 function as a current driven feedback amplifier. The input current is converted to a voltage output signal to drive the right horizontal CRT deflection plate. R558 establishes the quiescent current level for series connected transistors Q558 and Q560.

The CRT deflection plates present a capacitive load to the amplifier, which requires additional current during fast transients. Extra current for positive excursions is provided by Q551 via R555, C555, and Q558; for negative excursions, by Q560 via R563.

Resistor R556 reduces the power dissipation in Q558. Resistors R566, R567, and R569 provide DC feedback and establish low frequency gain. Capacitors C566 and C588 (C568 for lower serial numbers) are adjusted for correct gain at fastest sweep rates (in later serial numbered instruments, C588 replaces C568 and a differently located C588, a thermal compensation network C584-R584 is added).

Basic operation of the Left Output Amplifier stage is the same as described for the Right Output Amplifier. C586 and C588 set the gain for the fastest sweep rates (C588 is relocated for later serial numbers and affects both Right and Left Output Amplifiers). The output signal at the collectors of Q578-Q580 connects to the left deflection plate of the CRT through R585.

The series circuit CR549 and R549 stabilize the output amplifier during fast retrace intervals. R535 is adjusted to balance the negative excursions of the right and left sides of the amplifier when the time base plug-in is used in X10 Magnified mode.

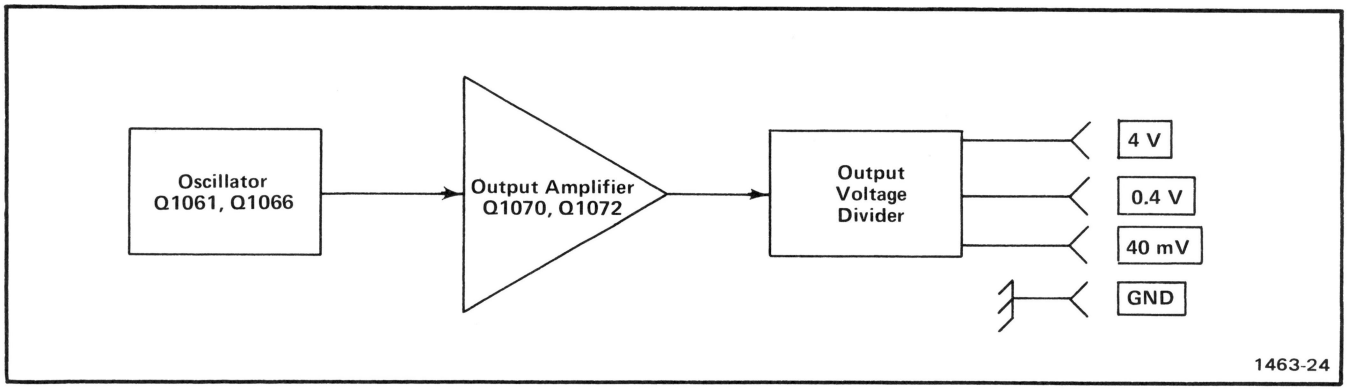

Fig. 3-20. Calibrator detailed block diagram.

CALIBRATOR AND FRONT PANEL SWITCHING

The Calibrator and Front Panel Switching circuit provides output voltage to the front-panel Calibrator pin-jacks and includes the front-panel switches and controls. Fig. 3-20 shows a detailed block diagram of the Calibrator portion of this circuit. A schematic of this circuit is shown on diagram 7 at the rear of this manual.

Mode Switch Logic

The VERT MODE switch determines the operating mode of the Vertical Interface circuit. The levels established by this switch are also used in various other circuits throughout this instrument. This switch is designed so it is self-cancelling (i.e., only one button can be pressed at a time). Specific operation of this switch is described in connection with the circuits that it controls.

The TRIG SOURCE switch controls the operation of the Trigger Selector circuit. This switch is also self-cancelling so only one of the buttons can be pressed at a time. Operation of this switch is discussed in connection with the Trigger Selector circuit.

Calibrator

General. The Calibrator circuit provides accurate voltage output at the front-panel Calibrator pin-jacks. Repetition rate of the output signal is about one kilohertz.

Oscillator. Q1061 and Q1066 are connected as a square-wave oscillator to determine the repetition rate of the Calibrator circuit. Oscillation occurs as follows: Assume that Q1061 is conducting and Q1066 is off. The collector current of Q1061 through R1061 produces a voltage level which holds the base of Q1066 low. This keeps Q1066 turned off, and since there is no current through it, its collector goes positive to produce the positive portion of the square wave. At the same time, C1064 begins to charge toward −15 volts through R1069. The emitter of Q1066 goes negative also as C1064 charges, until it reaches a level about 0.6 volt more negative than the level at its base. Then, Q1066 is forward biased and its emitter rapidly rises positive. Since C1064 cannot change its charge instantaneously, the sudden change in voltage at the emitter of Q1066 pulls the emitter of Q1061 positive also, to reverse bias it. The current through Q1066 produces a voltage drop at its collector to produce the negative portion of the square wave.

Now, conditions are reversed. Since Q1061 is reverse biased, there is no current through it. Therefore, C1064 can begin to discharge through R1063. The emitter level of Q1061 follows the discharge of C1064 until it reaches about −0.6 volt. Then, Q1061 is forward biased and its collector drops negative to reverse bias Q1066. This interrupts the current through Q1066, and its collector goes positive again to complete the square wave. Once again, C1064 begins to charge through R1069 to start the second cycle. The signal produced at the collector of Q1066 has a repetition rate of about one kilohertz.

The Oscillator stage can be changed by jumper P1066. When this jumper is installed in the DC position, the Oscillator is disabled and the collector of Q1066 rises positive. This produces a positive DC voltage output to the front-panel Calibrator pin-jacks.

Output Amplifier. Transistors Q1070 and Q1072 are connected as a comparator with the reference level at the base of Q1072 determined by the network R1073-R1074-R1076-R1077. The 4 Volts adjustment R1077, is set to provide accurate output voltage at the 4 V Calibrator pin-jack.

The output of the Oscillator stage is connected to the base of Q1070. This signal controls the conduction of comparator Q1070-Q1072. When the base of Q1070 is high, it is off and Q1072 is conducting. This produces a positive output voltage at the Calibrator pin-jacks. When the level at the base of Q1070 is switched low, Q1070 conducts and Q1072 is reverse biased. Now, the voltage level at the Calibrator pin-jacks drops to zero.

Output Voltage Divider. The collector current of Q1072 in the Output Amplifier stage is applied across the voltage divider made up of resistors R1079 through R1085. This divider is designed to provide a low output resistance in the 40 mV and 0.4 V positions while providing accurate output voltages. The output resistance at the 4 V pin-jack is about 450 ohms and at the 0.4 V and 40 mV pin-jacks is about 50 ohms.

CRT CIRCUIT

The CRT Circuit produces the high-voltage potentials and provides the control circuits necessary for the operation of the cathode-ray tube (CRT). This circuit also includes the Z-Axis Amplifier stage to set the intensity of the CRT display and the Auto Focus amplifier to assure optimum focus. Fig. 3-21 shows a detailed block diagram of the CRT Circuit. A schematic of this circuit is shown on diagram 8 at the rear of this manual.

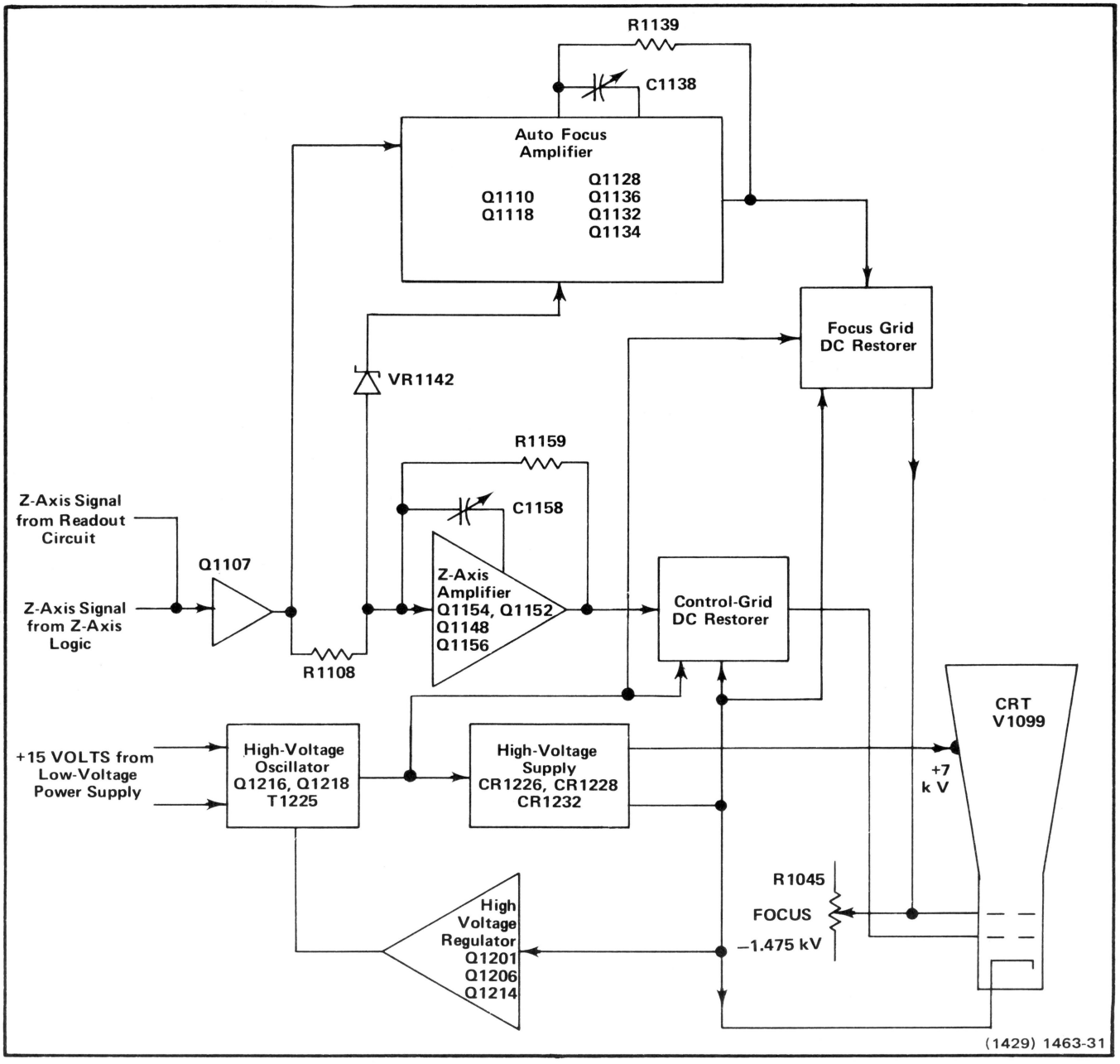

Fig. 3-21. CRT Circuit detailed block diagram.

Z-Axis Amplifier

The Z-Axis signal from the Logic circuit and the Z-Axis signal from the Readout system are connected to the emitter of Q1107. Transistor Q1107 is a common-base amplifier to establish a low input impedance for the input signals. Transistors Q1148, Q1152, Q1154, and Q1156 form a current driven operational amplifier. The input and output transistors are complementary to provide a fast rise-time and a fast fall-time response. The amplifier input is through resistor R1108. Resistor R1152 establishes a low current in the series connected output transistors. Transistor Q1148 supplies additional current through C1151 for the positive transients, and transistor Q1156 supplies additional current through C1158 for negative transients. Capacitor C1158 is adjusted for optimum square-wave output, resistors R1158 and R1159 along with capacitor C1158 form the feedback network. Zener diode VR1142 provides the necessary change of voltage from the collector of Q1107 to the base of Q1156.

Auto Focus Amplifier

The voltage developed across R1108 by the Z-Axis amplifier driving current is inverted and amplified non-linearly by Q1110 and Q1118, to conform to the requirements of the CRT focus electrode. As the base of Q1110 is driven negative CR1115 is forward biased, producing a knee in the amplifier response. The Level where the knee occurs is determined by the adjustment R1121. The operation of the remaining amplifier is identical to the Z-Axis amplifier.

High-Voltage Oscillator

Power for operation of the high-voltage supply is provided from the +15-Volt Supply. At the time of turn-on, CR1215 is reversed biased holding the collector of Q1214 positive. This allows the starting base bias current for the High-Voltage Oscillator to be supplied from the +5-Volt Supply through R1214, Q1214, and the base feedback windings of T1225 while the emitter potential of Q1216-Q1218 is established by the negative side of the +15-Volt Supply. As the output of the high-voltage supply increases to its required output level, the collector of Q1214 goes negative until CR1215 is forward biased. Then the collector level of Q1214 is clamped about 0.6 volt more negative than the negative side of the +15-Volt Supply. This configuration provides a controlled starting current for the High-Voltage Oscillator at turn-on, and at the same time allows the High-Voltage Regulator stage to control the current for the High-Voltage Oscillator after the stage reaches operating potentials to provide a regulated high-voltage output.

Q1216-Q1218 and the associated circuitry comprise an oscillator to drive high-voltage transformer T1225. When the instrument is turned on, assume that Q1216 comes into conduction first. The collector current of Q1216 produces a corresponding current increase in the base-feedback winding of T1225 to further increase the conductivity of Q1216. At the same time, the voltage developed across the base-feedback winding connected to Q1216 holds Q1218 reverse biased.

As long as the collector current of Q1216 continues to increase, voltage is induced into the base-feedback windings of T1225 which holds Q1216 forward biased and Q1218 reverse biased. However, when the collector current of Q1216 stabilizes, the magnetic field built up in T1225 begins to collapse. This induces an opposite current into the base windings which reverse biases Q1216, but forward biases Q1218. When the induced voltage at the base of Q1218 exceeds the bias set by the High-Voltage Regulator, Q1218 conducts and the amplified current at its collector adds to the current flowing through T1225 due to the collapsing field. Then, as the current through T1225 stabilizes again, the magnetic field around it once more begins to collapse. This reverses the conditions to start another cycle.

The signal produced across the primary of T1225 is a sine wave at a frequency of 35 to 45 kilohertz. The amplitude of the oscillations in the primary of T1225 is controlled by the High-Voltage Regulator to set the total accelerating potential for the CRT. Filter network C1222-L1222 decouples high peak operating current from the +15-Volt Supply.

High-Voltage Regulator

A sample of the secondary voltage from T1225 is connected to the High-Voltage Regulator stage through divider R1245A-R1245B. Q1201 and Q1206 are connected as an error amplifier to sense any change in the voltage level at the base of Q1201. The ground reference for the emitter of Q1201 through R1202, establishes the reference level for this stage. The output voltage is set by the fixed values of the components in this circuit.

Regulation occurs as follows: If the output voltage at the −1475 V test point starts to go positive (less negative), a sample of this positive-going change is connected to the base of Q1201 through R1245B. Both Q1201 and Q1206 are forward biased by this positive change, which in turn increases the conduction of Q1214. This results in a greater bias current delivered to the bases of Q1216-Q1218 through Q1214. Now, the bases of both Q1216 and Q1218 are biased closer to their conduction level so the feedback voltage induced into their base-feedback windings produces a larger collector current. This results in a larger induced voltage in the secondary of T1225 to produce a more negative level at the −1475 V test point to correct the original error. In a similar manner, the circuit compensates for output changes in a negative direction. Since the amplitude of the voltage induced into the secondary of

T1225 also determines the output level of the positive High-Voltage Supply and the Control-Grid Supply, the total high-voltage output is regulated by sampling the output of the negative High-Voltage Supply.

High-Voltage Supplies

High-voltage transformer T1225 has two output windings. One winding provides filament voltage for the cathode-ray tube. The other winding provides the negative and positive accelerating potential for the CRT and the bias voltage for the control grid. All of these voltages are regulated by the High-Voltage Regulator stage to maintain a constant output voltage as previously described.

Positive accelerating potential for the CRT anode is supplied by the voltage doubler. The applied voltage from the secondary of T1225 is about 3.5 kilovolts peak-to-peak. This results in an output voltage of about +7 kilovolts at the CRT anode. The negative accelerating potential for the CRT cathode is also obtained from this same secondary winding. Half-wave rectifier CR1232 provides an output voltage of about −1.475 kilovolts which is connected to the CRT cathode through R1234. The cathode and filament are connected together through R1275 to prevent cathode-to-filament breakdown due to a large difference in potential between these CRT elements. A sample of the negative accelerating voltage is connected to the High-Voltage Regulator to maintain a regulated high-voltage output.

The network consisting of diodes CR1269-CR1268-CR1270-CR1264-VR1264 provides the negative voltage for the control grid of the CRT. Output level of this supply is set by CRT Grid Bias adjustment R1261. Approximately 600 volts peak-to-peak from the secondary of T1225 is connected to the Control-Grid Supply through C1266 and R1266. Diodes CR1268 and CR1264 clip this signal to determine the operating level at the control grid. CR1268 limits the negative excursion of the signal; quiescently when the CRT is blanked, the anode of CR1268 is set at about +15 volts by the Z-Axis Amplifier stage. The positive clipping level at the cathode of CR1264 is set by CRT Grid Bias adjustment R1261. R1261 is adjusted to bias the control grid of the CRT just enough negative so the trace is blanked between sweeps. Under normal conditions, this biases the control grid about 80 volts more negative than the cathode.

The negative level at the CRT cathode is connected to the cathode of CR1270. This level is held constant by the High-Voltage Regulator as described previously. The clipped voltage developed by diodes CR1264 and CR1268 is peak to peak rectified by diodes CR1269 and CR1270 and super-imposed on this negative voltage to result in a level at the grid of the CRT which is more negative than the CRT cathode level. C1269 acts as a filter to provide a constant voltage output level. The unblanking gate level developed by the Z-Axis Amplifier stage is applied to the anode of CR1268 through R1157. The fast rising and falling portions of this signal are coupled directly to the output through C1269. The overall effect of the unblanking gate is to further clip the negative excursions thereby reducing the voltage difference between grid and cathode of the CRT. This allows the cathode current of the CRT to pass to the anode so the display can be reviewed.

CRT Control Circuits

The focus of the display is determined by the FOCUS control R1045. This control and the Auto Focus amplifier maintains a well-defined display for fast changes in the intensity of the display. The network consisting of CR1255, CR1254, CR1253, CR1258, and VR1258 provide the negative voltage for the focus grid of the CRT. Approximately 600 volts peak-to-peak from the secondary of T1225 is connected to the focus grid supply through C1257 and R1257. The positive clipping level at the anode of CR1258 is set by the FOCUS control setting. This determines the operating level at the focus grid. Under normal operating conditions the voltage applied to the focus grid is more positive (less negative) than the control grid or the cathode of the CRT. The signal developed by the Auto Focus amplifier is coupled to the focus grid by C1254. When there is a sudden change in intensity levels the focus grid level will change to maintain a well-defined display. Astigmatism adjustment R1193, which is used in conjunction with the FOCUS control to obtain a well-defined display, varies the positive level on the astigmatism grid. Geometry adjustment R1184 varies the positive level on the horizontal deflection-plate shield to control the overall geometry of the display.

Two adjustments control the trace alignment by varying the magnetic fields induced by coils around the CRT. Y-Axis Alignment R1190 controls the current through L1098, which affects the CRT beam after vertical deflection, but before horizontal deflection. Therefore, it affects only the vertical (Y) components of the display. Beam Rotation adjustment R1181 controls the current through L1099 and affects both the vertical and horizontal rotation of the display.

LOW-VOLTAGE POWER SUPPLY

The Low-Voltage Power Supply circuit provides the operating power for this instrument from six regulated supplies. Electronic regulation is used to provide stable, low-ripple output voltages. Each supply (except the +130 V supply, which is fused) contains a short-protection circuit to prevent instrument damage if a supply is inadvertently over-loaded or shorted to ground. Fig. 3-22 shows a detailed block diagram of the Low-Voltage Power Supply circuit. A schematic of this circuit is shown on diagram 9 at the rear of this manual.

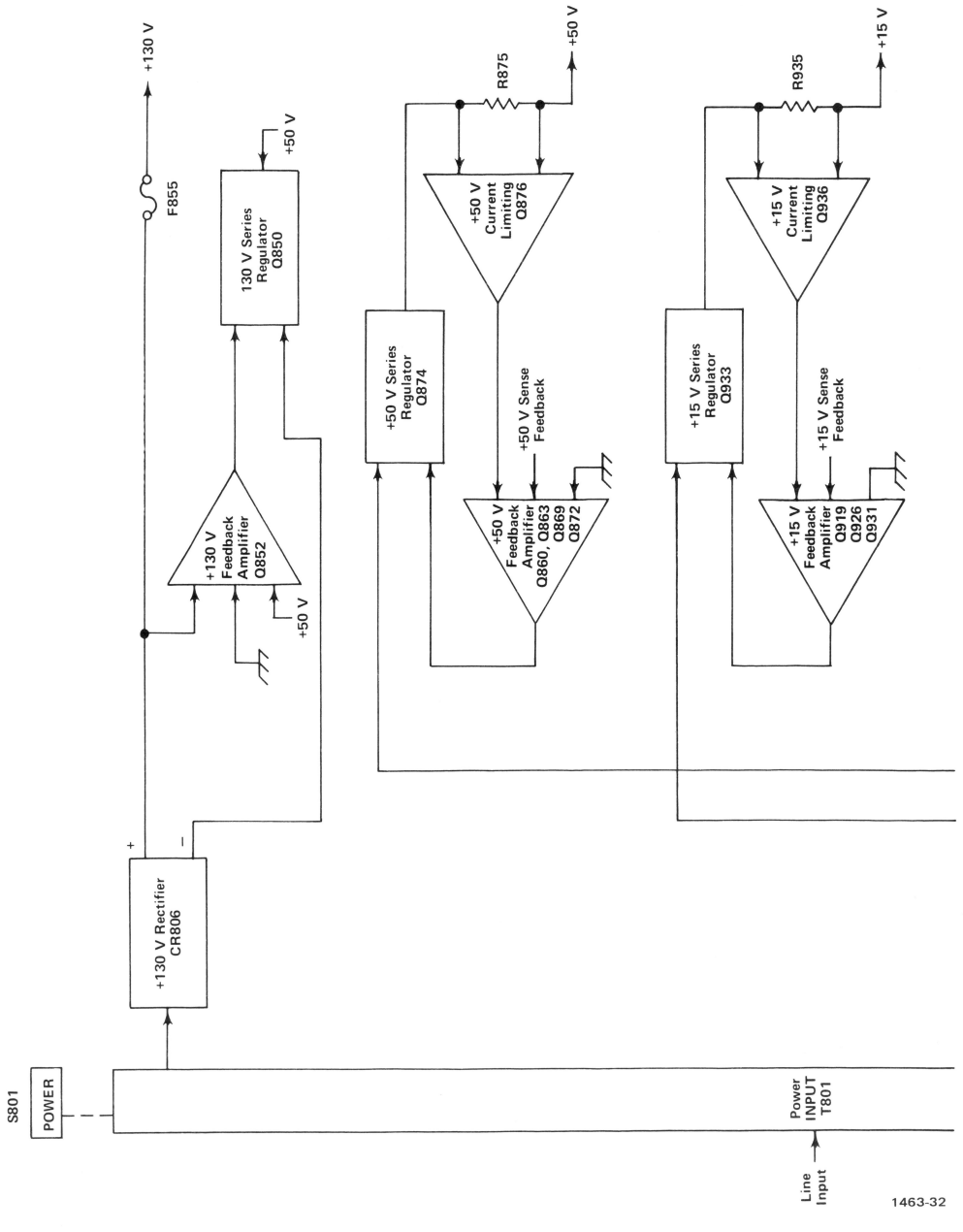

Fig. 3-22. Low-Voltage Power Supply detailed block diagram.

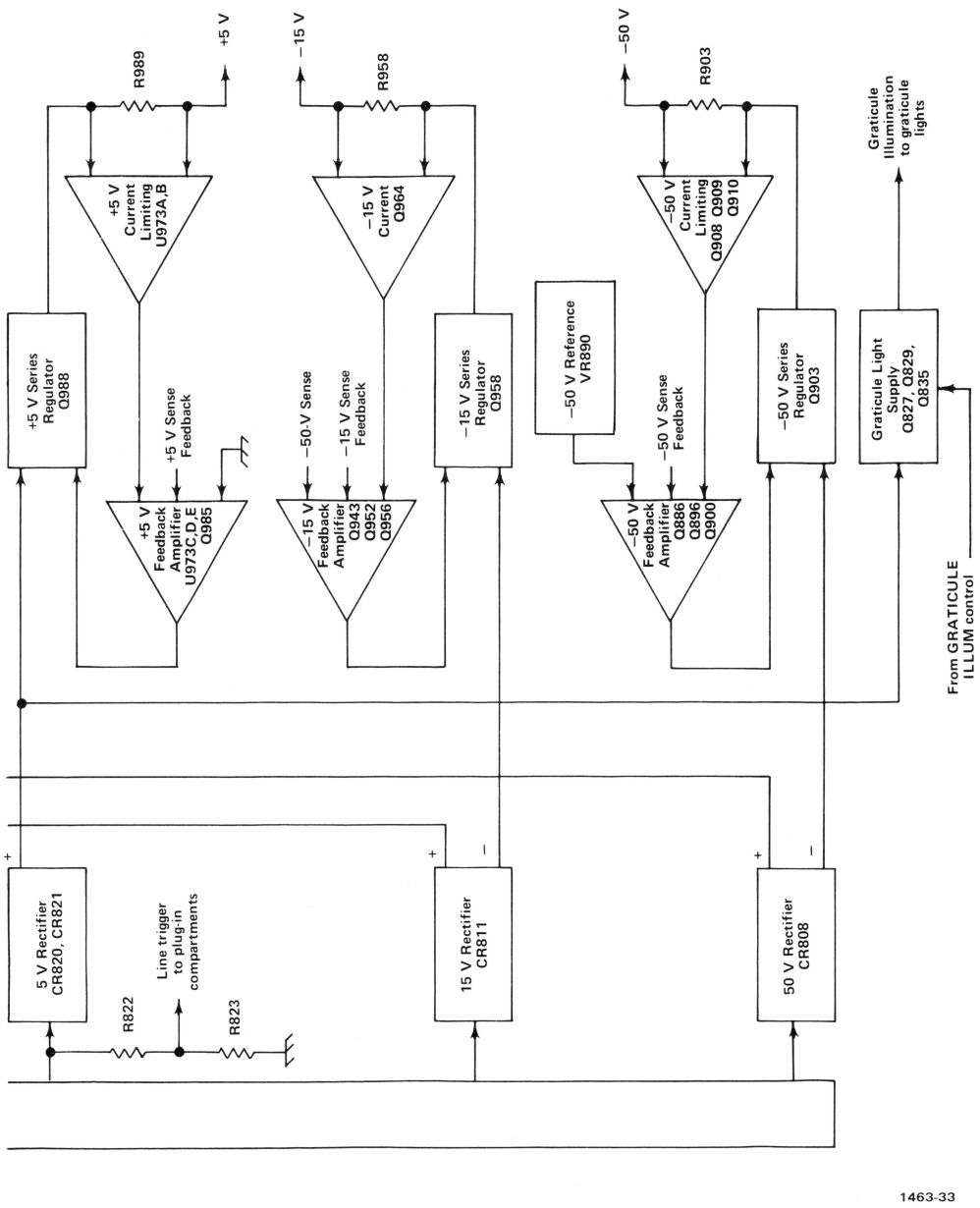

Fig. 3-22. Low-Voltage Power Supply detailed block diagram (cont).

Power Input

Power is applied to the primary of transformer T801 through line fuse F1000, thermal cutout S1000, and POWER switch S1001. The Voltage-Selector Jumper, P1001, connects the two halves of the primary of T801 in parallel for 110-volt (nominal) operation. Voltage-Selector Jumper P1002 connects the two halves of the primary in series for 220-volt (nominal) operation. The line fuse, F1000, must be changed to provide the correct protection for 220-volt nominal operation.

Each half of the primary of T801 has taps above and below the 110-volt (220-volt) nominal point. When the Voltage Selector Jumper is moved from LOW to MED to HI, more turns are effectively added to the primary winding and the turns ratio is decreased to compensate for the increased primary voltage. This configuration extends the regulating range of the 7613.

A fan provides forced-air cooling. The fan is connected in parallel with one half of the primary winding of T801. Therefore, it always has the same voltage applied regardless of the position of the Voltage-Selector Jumper.

Thermal cutout S1000 provides thermal protection for this instrument. If the internal temperature of the instrument exceeds a safe operating level, S1000 opens to interrupt the applied power. When the temperature returns to a safe level, S1000 automatically closes to re-apply the power.

–50-Volt Supply

The following discussion includes the description of the 50 V Rectifier, –50 V Series Regulator, –50 V Feedback Amplifier, –50 V Reference, and –50 V Current Limiting stages. Since these stages are closely related in the operation of the –50-volt regulated output, their performance is most easily understood when discussed as a unit.

The 50 V Rectifier assembly CR808 rectifies the output at the secondary of T801 to provide the unregulated voltage source for both the –50- and +50-volt supplies. CR808 is connected as a bridge rectifier and its output is filtered by C808-C809. Transistors Q886, Q896, Q900 operate as a feedback-stabilized regulator circuit to maintain a constant –50-volt output level. Q886 is connected as a differential amplifier to compare the feedback voltage at the base of Q886B against the reference voltage at the base of Q886A. The error output at the collector of Q886B reflects the difference, if any, between these two inputs. The change in error-output level at the collector of Q886B is always opposite in direction to the change in the feedback input at the base of Q886B (out of phase).

Zener diode VR890 sets a reference level of about –9 volts at the base of Q886A. A feedback sample of the output voltage from this supply is connected to the base of Q886B through divider R880-R881-R882. R881 in this divider is adjustable to set the output level of this supply. Notice that the feedback voltage to this divider is obtained from a line labeled –50 V Sense. Fig. 3-23 illustrates the reason for this configuration. The inherent resistance of the interconnecting wire between the output of the –50-Volt Supply and the load produces a voltage drop which is equal to the output current multiplied by the resistance of the interconnecting wire. Even though the resistance of the wire is small, it results in a substantial voltage drop due to the high output current of this supply. Therefore, if the feedback voltage were obtained ahead of this drop, the voltage at the load might not maintain close regulation. However, the –50 V Sense feedback configuration overcomes this problem since it obtains the feedback voltage from a point as close as practical to the load. Since the current in the –50 V Sense line is small and constant, the feedback voltage is an accurate sample of the voltage applied to the load.

Regulation occurs as follows: If the output level of this supply decreases (less negative) due to an increase in load, or a decrease in input voltage (as a result of line voltage changes or ripple), the voltage across divider R880-R881-R882 decreases also. This results in a more positive feedback level at the base of Q886B than that established by the –50 V Reference stage at the base of Q886A. Since the transistor with the more positive base controls the conduction of the differential amplifier, the output current at the collector of Q886B increases. This increase in output from Q886B allows more current to flow through Q896 and Q900 to result in increased conduction of –50 V Series Regulator Q903. The load current increases and the output voltage of this supply also increases (more negative). As a result, the feedback voltage from the –50 V Sense line increases and the base of Q886B returns to the same level as the base of Q886A. Similarly, if the output level of this supply increases (more negative), the output current of Q886B decreases. The feedback through Q896 and Q900 reduces the conduction of the –50 V Series Regulator to decrease the output voltage of this supply.

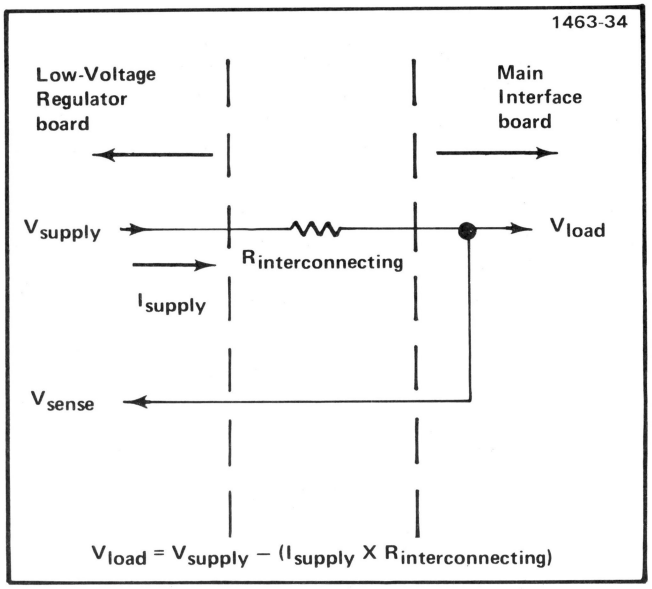

Fig. 3-23. Schematic illustrating voltage drop between power supply output and load due to resistance of interconnecting wire.

−50 Volts adjustment R881 determines the divider ratio to the base of Q886B and thereby determines the feedback voltage. This adjustment sets the output level of the supply in the following manner: If R881 is adjusted so the voltage at its variable arm goes less negative (closer to ground), this appears as an error signal at the base of Q886B. In the same manner as described previously, this positive-going change at the feedback input of the differential amplifier increases the conduction of the −50 V Series Regulator to produce more current to the load, and thereby increase the output voltage of this supply. This places more voltage across divider R880-R881-R882 and the divider action returns the base of Q886B to about −9 volts. Notice that the feedback action of this supply forces a change in the output level which always returns the base of Q886B to the same level as the base of Q886A. In this manner, the output level of the −50-Volt Supply can be set to exactly −50 volts by correct adjustment of R881.

The −50 V Current Limiting stage Q908-Q909-Q910 protects the −50-Volt Supply if excess current is demanded from this supply. All of the output current from the −50-Volt Supply flows through R903. Transistor Q908 senses the voltage at the collector of the −50 V Series Regulator Q903 and compares it against the −50 V output level at the base of Q909 which is obtained from the other side of R903. Under normal operation, Q908 is held in conduction and Q909 is off. However, when excess current is demanded from the −50 V Series Regulator due to a short circuit or similar malfunction at the output of this supply, the voltage drop across R903 increases until the base of Q908 goes more negative than the level at the base of Q909. Then Q909 takes over conduction of the comparator. The collector current of Q909 increases the voltage drop across R896 to reduce the conduction of Q896 in the −50 V Feedback Amplifier and limit the conduction of Q903. Q910 is connected as a constant-current source for Q908-Q909.

−15-Volt Supply

Basic operation of all stages in the −15-V Supply is the same as for the −50-Volt Supply. Reference level for this supply is established by divider R945-R946 between ground and the −50 V Sense voltage. The divider ratio of R945-R946 sets a level of −15 volts at the base of Q943A. The level on the −50 V Sense line is held stable by the −50-Volt Supply as described previously. The −15 V Sense voltage is connected to the base of Q943B through R940. Any change at the output of the −15-Volt Supply appears at the base of Q943B as an error signal. The output voltage is regulated in the same manner as described for the −50-Volt Supply.

+5-Volt Supply

Basic operation of the +5-Volt Supply is the same as described for the previous supplies. The +5 V Current Limiting and +5 V Feedback Amplifier (except for Q985) is made up of a five-transistor array U973. Notice that both U973C and Q985 in the +5 V Feedback Amplifier are connected as emitter followers, since inversion is not necessary in the feedback path for positive output voltages. Reference voltage for the +5 V Feedback Amplifier stage is established by divider R970-R971 between the +5 V Sense and −50 V Sense feedback voltages. This divider establishes a quiescent level of about 0 volt at the base of U973E.

+15-Volt Supply

The +15-Volt Supply operates in the same manner as described for the previous supplies. The unregulated +15-Volt Supply provides the source voltage for the High-Voltage Oscillator stage in the CRT circuit through fuse F814 and P870.

+50-Volt Supply

Operation of the +50-Volt Supply is the same as described for the previous supplies. The unregulated +50 volts, from 50 V Rectifier CR808, is used to provide a positive starting voltage for the −50-Volt Supply.

+130-Volt Supply

The +130-V Rectifier CR806 provides the rectified voltage for the +130-Volt Supply. However, this secondary winding of T801 does not supply the full potential necessary to obtain the +130-volt output level. To provide the required output level, the +50-Volt Supply is connected in series with this supply through Q850. Basic regulation of

the output voltage is provided by +130 V Feedback Amplifier Q852, and +130 V Series Regulator Q850.

The output voltage of this supply is connected across divider R855-R856. This divider provides a quiescent level of about +50 volts at the base of Q852. The reference level for this supply is provided by the +50-Volt Supply connected to the emitter of Q852. If the output of this supply changes, this change is sensed by Q852 and an amplified error signal is connected to the base of Q850. This error signal changes the conduction of the +130 V Series Regulator Q850 to correct the output error. Fuse F855 protects this supply if the output is shorted. However, since the response time of F855 is slow to a shorted condition, VR851 provides additional current to the base of Q850 to protect it from damage due to over-voltage. Diode CR852 limits the reverse bias on Q852 to about 0.6 volt when F855 is blown.

Graticule Light Supply

Power for the graticule lights is supplied by the Graticule Light Supply. Rectified voltage for this supply is provided by 5 V Rectifier CR820-CR821. Q835 operates as a series regulator transistor. Emitter follower Q829 determines the conduction of this series regulator as controlled by front panel GRATICULE ILLUM Control R1095. Current-limiting to protect this supply is provided by Q827. Under normal operation, divider R830-R831-R833 sets the base of Q827 below its conduction level. However, if excess current is demanded from this supply, the voltage drop across R837-R838 increases until Q827 comes into conduction. The collector of Q827 then limits the conduction of this supply to limit its output current.

Divider R822-R823 provides a sample of the line voltage in the secondary of T801 to the plug-in unit. This provides a line-frequency reference to the plug-in units for internal triggering at line frequency or for other applications.

SIGNAL OUT BOARD

VERT SIG OUT

The vertical signal is selected by the TRIG SOURCE switch. The vertical signal selected is applied to the bases of a differential amplifier Q606 and Q618. A single-ended signal is taken off the collector of Q618 and connected to an output buffer Q620. CR621 and CR622 provide protection against a high voltage inadvertently applied to the output connector.

+ GATE OUT

The gate signal is connected to a comparator circuit Q662 and Q666 through resistor R660. From the comparator the gate signal is connected to the emitter of an output buffer Q672. Gate Selector switch connects one of the gate signals to R660, the input of the Gate Amplifier. Possible gate signals are MAIN gate and, with a dual-sweep time-base unit, a DELAY or an AUXILIARY gate signal can be selected. CR674 and CR676 provide protection against a high voltage inadvertently applied to the output connector.

+ SAWTOOTH OUT

The sawtooth signal is connected to the Sawtooth Amplifier through R36. Q631, Q634, and Q640 comprise a negative feedback amplifier with a gain of two, determined by the ratio of feedback resistor R645 to the combined input resistance of R630 and R63. CR635 and CR676 provide protection against a high voltage inadvertently applied to the output connector.

READOUT SYSTEM

The Readout System in the 7613 provides alphanumeric display of information encoded by the plug in units. This display is presented on the CRT and is written by the CRT beam on a time-shared basis. Schematics for the total Readout System are shown on diagrams at the rear of this manual.

The definitions of several terms must be clearly understood to follow this description of the Readout System. These are:

Character—A character is a single number, letter, or symbol which is displayed on the CRT, either alone or in combination with other characters.

Word—A word is made up of a related group of characters. In the 7613 Readout System, a word can consist of up to ten characters.

Frame—A frame is a display of all words for a given operating mode and plug-in combination. Up to six words can be displayed in one frame. Fig. 3-24 shows one complete frame (simulated readout) and the position at which each of the six words is displayed.

Column—One of the vertical lines in the Character Selection Matrix (see Fig. 3-25). Columns C-O (column zero) to C-10 (column 10) can be addressed in the 7613 system.

Row—One of the horizontal lines in the Character Selection Matrix (Fig. 3-25). Rows R-1 (row 1) to R-10 (row 10) can be addressed in the 7613 system.

Time-slot—A location in a pulse train. In the 7613 Readout System, the pulse train consists of 10 negative-going pulses. Each of these time-slots is assigned a number between one and ten. For example, the first time-slot is TS-1.

Time-multiplexing—Transmission of data from two or more sources over a common path by using different time intervals for different signals.

Display Format. Up to six words of readout information can be displayed on the 7613 CRT. The position of each word is fixed and is directly related to the plug-in unit from which it originated. Fig. 3-24 shows the area of the graticule where the readout from each plug-in unit is displayed. Notice that channel 1 of each plug-in unit is displayed within the top division of the CRT and channel 2 is displayed directly below within the bottom division. Fig. 3-26 shows a typical display.

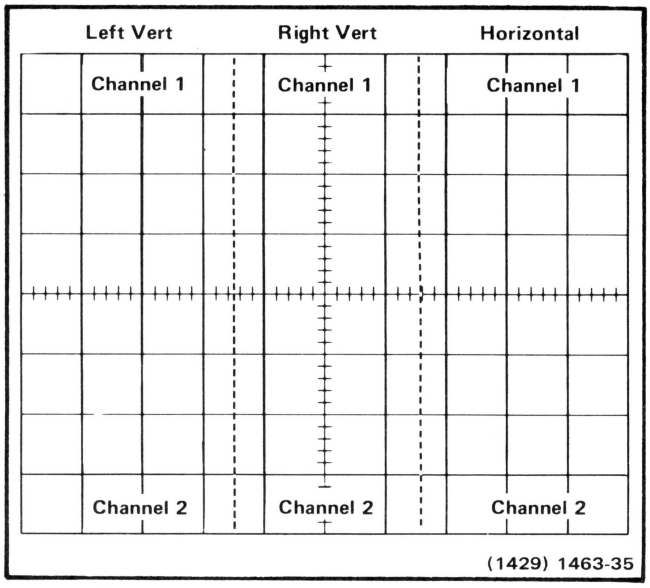

Fig. 3-24. Location of readout words on the CRT identifying the originating plug-in unit and channel (one complete frame shown, simulated readout).

Each word in the readout display can contain up to 10 characters, although the typical display will contain between two and seven characters per word. The characters are selected from the Character Selection Matrix shown in Fig. 3-25. Any one of the 50 separate characters can be addressed and displayed on the CRT. In addition, 12 operational addresses are provided for special instructions to the Readout System. The unused locations in the Matrix (shaded areas) are available for future expansion of the Readout System. The method of addressing the locations in the Character Selection Matrix is described in the following discussion.

Developing the Display. The following basic description of the Readout System uses the block diagram shown in Fig. 3-27. This description is intended to relate the basic function of each stage to the operation of the overall Readout System. Detailed information on circuit operation is given later.

The key block in the Readout System is the Timer stage. This stage produces the basic signals which establish the timing sequences within the Readout System. Period of the timing signal is about 250 microseconds (drops to about 210 microseconds when Display-Skip is received; see detailed description of Timing stage for further information). This stage also produces control signals for other stages within this circuit and interrupt signals to the Vertical Interface, Horizontal Interface, CRT Circuit, and Z-Axis Logic stage which allow a readout display to be presented. The Time-Slot Counter stage receives a trapezoidal voltage signal from the Timer stage and directs it to one of ten output lines. These output lines are labeled TS-1 through TS-10 (time-slots one through ten) and are connected to the vertical and horizontal plug-in compartments as well as to various stages within the Readout System. The output lines are energized sequentially so there is a pulse on only one of the 10 lines during any 250 microsecond timing period. When the Time-Slot Counter stage has completed time-slot 10, it produces an End-of-Word pulse which advances the system to the next channel.

Two output lines, row and column, are connected from each channel of the plug-in units back to the Readout System. Data is encoded on these output lines by connecting resistors between them and the time-slot input lines. The resultant output is a sequence of ten analog current levels which range from zero to one milliampere (100 microamperes/step) on the row and column output lines. This row and column correspond to the row and column of the Character Selection Matrix in Fig. 3-25. The

ROW NUMBER ↓ / COLUMN NUMBER →	CURRENT (MILLI-AMPERES)	C-0	C-1	C-2	C-3	C-4	C-5	C-6	C-7	C-8	C-9	C-10
		0	0.1	0.2	0.3	0.4	0.5	0.6	0.7	0.8	0.9	⩾ 1.0
R-1	0	SKIP[1]	*0*	*1*	*2*	*3*	*4*	*5*	*6*	*7*	*8*	*9*
R-2	0.1		*!*	*<*	*I*	*/*	*+*	*−*	*+*	*C*	Δ	*>*
R-3	0.2		ADD[1] ONE ZERO	ADD[1] TWO ZEROS	SHIFT[1] PREFIX ←	SHIFT[1] PREFIX ← AND ADD ONE ZERO						*IDENTIFY*[1]
R-4	0.3		*m*	*μ*	*n*	*p*	*X*	*K*	*M*	*G*	*T*	*R*
R-5	0.4		*S*	*V*	*A*	*W*	*H*	*d*	*B*	*c*	Ω	*E*
R-6	0.5		*U*	*N*	*L*	*Z*	*Y*	*P*	*F*	*J*	*Q*	*D*
R-7	0.6				DECIMAL[1] POINT LOCATION NO. 3	DECIMAL[1] POINT LOCATION NO. 4	DECIMAL[1] POINT LOCATION NO. 5	DECIMAL[1] POINT LOCATION NO. 6	DECIMAL[1] POINT LOCATION NO. 7			
R-8	0.7										DECIMAL[2] POINT	
R-9	0.8											
R-10	0.9	ADD SPACE IN DISPLAY[1]										

UNUSED LOCATIONS. AVAILABLE FOR FUTURE EXPANSION OF READOUT SYSTEM

[1] OPERATIONAL ADDRESS.

[2] DECIMAL POINT CHARACTER. SEE DECIMAL POINT CHARACTER DESCRIPTION IN TEXT.

1195-25

Fig. 3-25. Character Selection Matrix for 7613 Readout System.

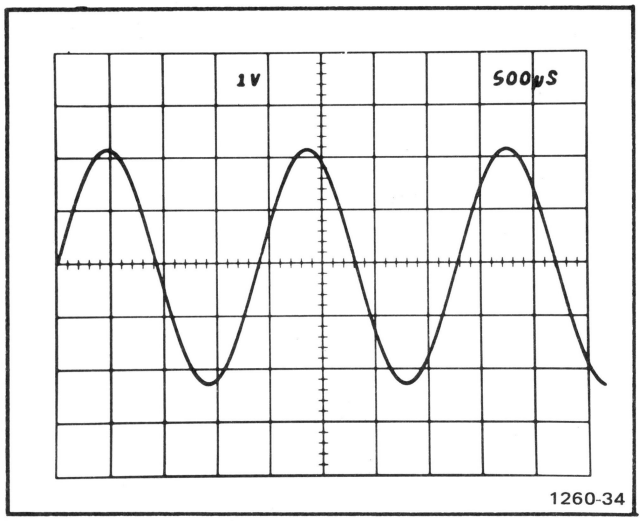

Fig. 3-26. Typical readout display where only channel 1 of the Right Vertical and Horizontal units is displayed.

standard format in which information is encoded onto the output lines is given in Table 3-2 (special purpose plug-in units may have their own format for readout; these special formats will be defined in the manuals for these units).

The encoded column and row data from the plug-in units is selected by the Column Data Switch and Row Data Switch stages respectively. These stages take the analog currents from the six data lines (two channels from each of the three plug-in compartments) and produce a single time-multiplexed analog voltage output which contains all of the column or row information from the plug-ins. The Column Data Switch and Row Data Switch are sequenced by the binary Channel Address No. 1 code from the Channel Counter.

The time multiplexed output of the Column Data Switch is monitored by the Display-Skip Generator to determine if it represents valid information which should be displayed. Whenever information is not encoded in a time-slot, the Display-Skip Generator produces an output level to prevent the Timer stage from producing the control signals which normally interrupt the CRT display and present a character.

The analog outputs of the Column Data Switch and Row Data Switch are connected to the Column Decoder and Row Decoder stages respectively. These stages sense the magnitude of the analog voltage input and produce an output current on one of ten lines. The outputs of the Column Decoder stage are identified as C-1 to C-10 (column 1 to 10) which correspond to the column information encoded by the plug-in unit. Likewise, the outputs of the Row Decoder stage are identified as R-1 to R-10 (row 1 to 10) which correspond to the row information encoded by the plug-in unit. The primary function of the row and column outputs is to select a character from the Character Selection Matrix to be produced by the Character Generator stage. However, these outputs are also used at other points within the system to indicate when certain information has been encoded. One such stage is the Zeros Logic and Memory. During time-slot 1 (TS-1), this stage checks if zero-adding or prefix-shifting information has been encoded by the plug-in unit and stores it in memory until time-slots 5, 6, or 8. After storing this information, it triggers the Display-Skip Generator stage so there is no display during this time slot (as defined by Standard Readout Format; see Table 3-2). When time-slots 5, 6, and 8 occur, the memory is addressed and any information stored there during time-slot 1 is transferred out and connected to the input of the Column Decoder stage to modify the analog data during the applicable time-slot.

TABLE 3-2

Standard Readout Format

Time-Slot Number	Description
TS-1	Determines decimal magnitude (number of zeros displayed or prefix change information) or the IDENTIFY function (no display during this time-slot).
TS-2	Indicates normal or inverted input (no display for normal).
TS-3	Indicates calibrated or uncalibrated condition of plug-in variable control (no display for calibrated condition).
TS-4	1-2-5 scaling.
TS-5 TS-6 TS-7	Not encoded by plug-in unit. Left blank to allow addition of zeros by Readout System.
TS-8	Defines the prefix which modifies the units of measurement.
TS-9 TS-10	Define the units of measurement of the plug-in unit. May be standard units of measurement (V, A, S, etc.,) or special units selected from the Character Selection Matrix.

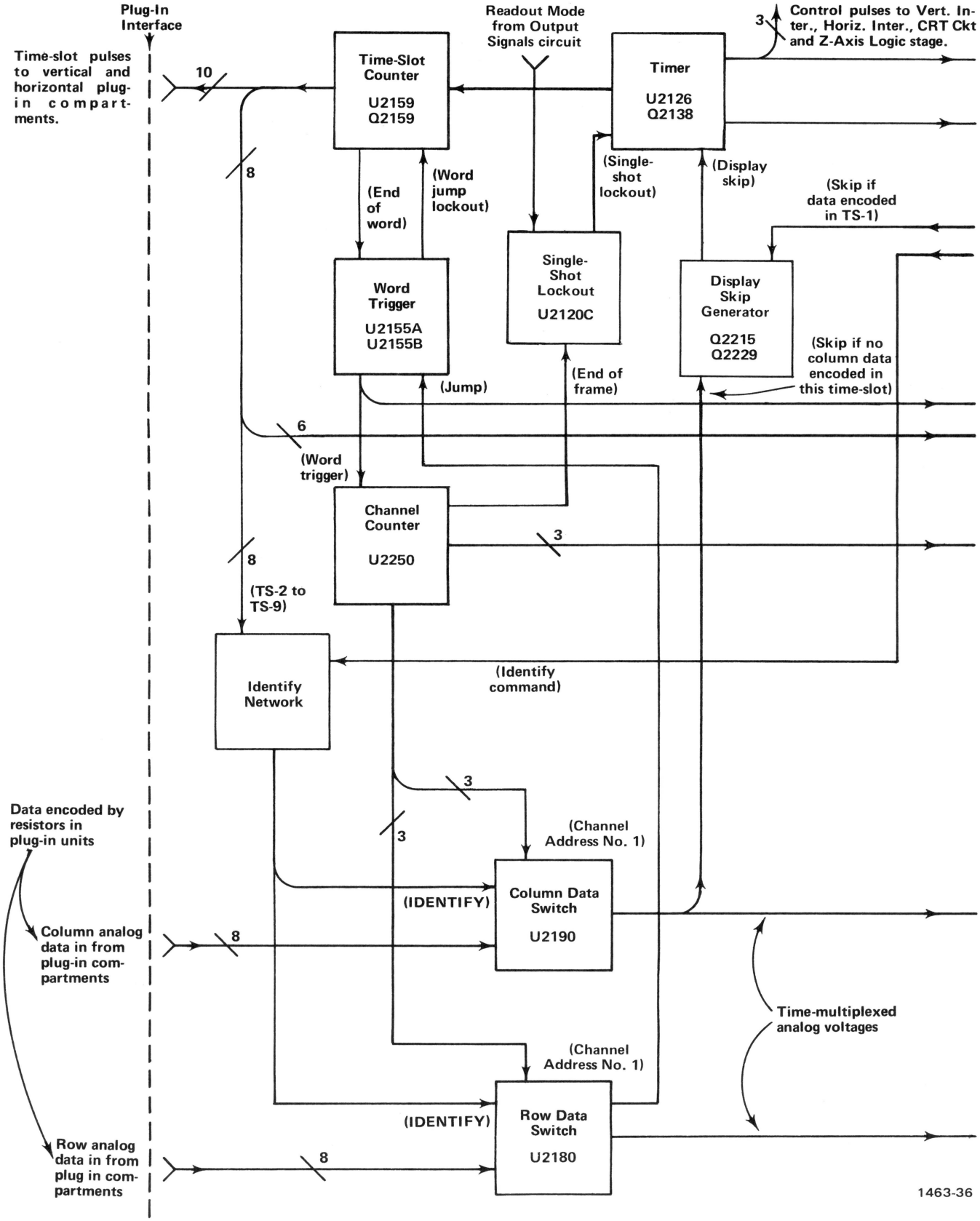

Fig. 3-27. Detailed block diagram of Readout System.

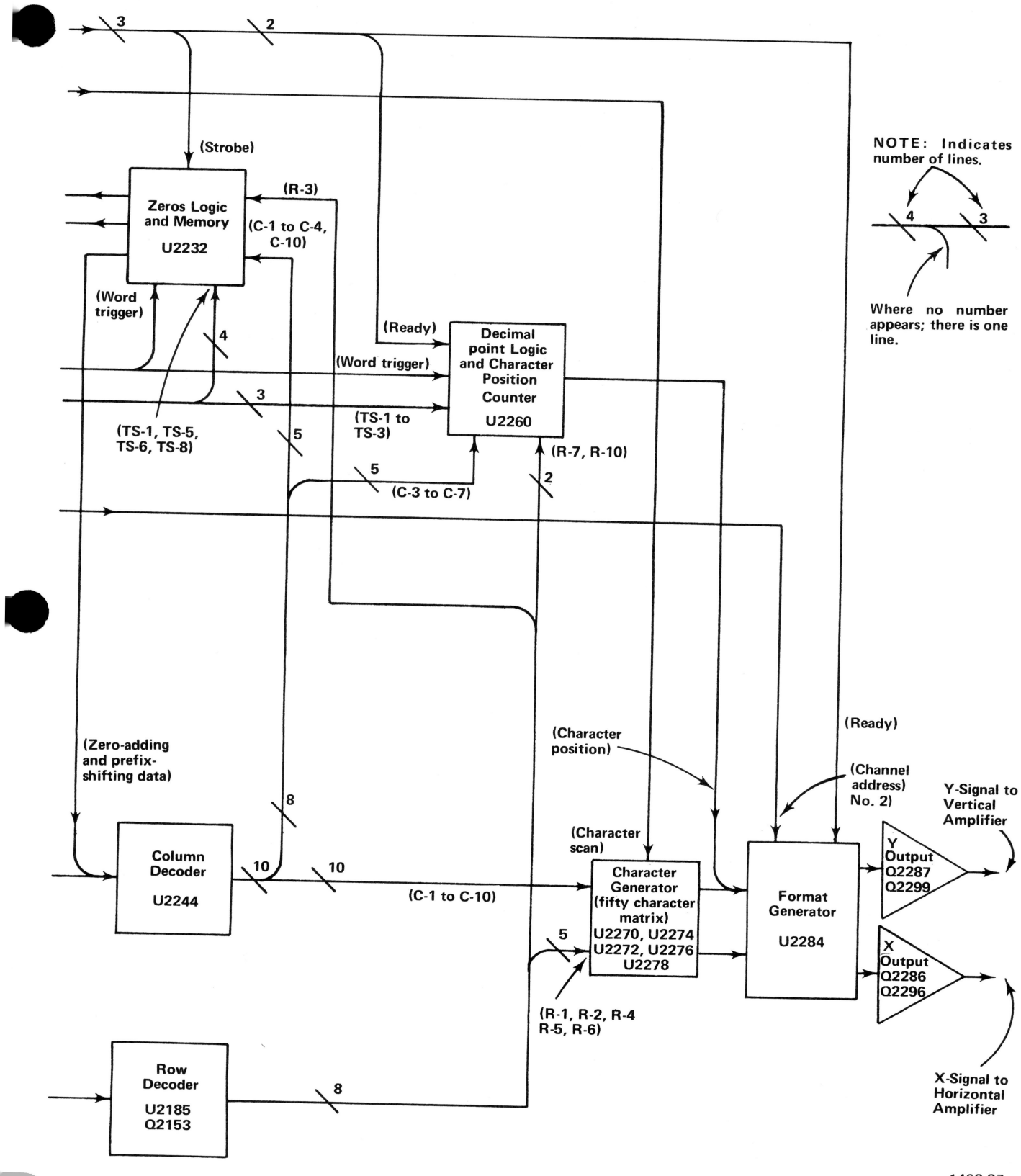

Fig. 3-27. Detailed block diagram of Readout System (cont).

Another operation of the Zeros Logic and Memory stage is to produce the IDENTIFY function. When time-slot 1 is encoded for IDENTIFY (column 10, row 3), this stage produces an output level which connects the Column Data Switch and Row Data Switch to a coding network within the Readout System. Then, during time-slots 2 through 9, an analog current output is produced from the Column Data Switch and Row Data Switch which addresses the correct points in the Character Selection Matrix to display the word "IDENTIFY" on the CRT. The Zeros Logic and Memory stage is reset after each word by the Word Trigger pulse.

The Character Generator stage produces the characters which are displayed on the CRT. Any of the 50 characters shown on the Character Selection Matrix of Fig. 3-24 can be addressed by proper selection of the column and row current. Only one character is addressable in any one time-slot; a space can be added into the displayed word by the Decimal Point Logic and Character Position Counter stage when encoded by the plug-in. The latter stage counts how many characters have been generated and produces an output current to step the display one character position to the right for each character. In addition, the character position is advanced once during each of time-slots 1, 2, and 3 whether a character is generated during these time-slots or not. This action fixes the starting point of the standard-format display such that the first digit of the scaling factor always starts at the same point within each word regardless of the information encoded in time-slot 2 (normal/invert) or time-slot 3 (cal/uncal) which precedes this digit. Also, by encoding row 10 and column 0 during any time-slot, a blank space can be added to the display. Decimal points can be added to the display at any time by addressing row 7 and columns 3 through 7 (see Character Selection Matrix for location of these decimal points). The Decimal Point Logic and Character Position Counter stage is reset after each word by the Word Trigger pulse.

The Format Generator stage provides the output signals to the vertical and horizontal deflection systems of the instrument to produce the character display. The binary Channel Address No. 2 code from the Channel Counter stage is connected to this stage so that the display from each channel is positioned to the area of the CRT which is associated with the plug-in and channel originating the word (see Fig. 3-24). The positioning current or decimal point location current generated by the Decimal Point Logic and Character Position Counter stage is added to the horizontal (X) signal at the input to the Format Generator stage to provide horizontal positioning of the characters within each word. The X- and Y-output signals are connected to the Horizontal Amplifier and Vertical Amplifier through the Horizontal Output and Vertical Output stages respectively.

The Word Trigger stage produces a trigger from the End-of-Word pulse generated by the Time-Slot Counter stage after the tenth time-slot. This Word Trigger pulse advances the Channel Counter to display the information from the next channel or plug-in. It also provides a reset pulse to the Zeros Logic and Memory stage and the Decimal Point Logic and Character Position Counter stage. The Word Trigger stage can also be advanced to jump a complete word or a portion of a word when a Jump command is received from the Row Decoder stage.

The Single-Shot Lockout stage allows the display sequence of the Readout System to be changed. Normally, the Readout System operates in a free-running mode so the waveform display is interrupted randomly to display characters. However, under certain conditions (such as single-shot photography), it is desirable that the Readout System operate in a triggered mode where the readout portion of the display is normally blanked out but can be presented on command. The Readout Mode switch determines the operating mode of the readout system.

Circuit Analysis of Readout System

The following analysis of the Readout System describes the operation of each stage in detail. Complete schematics of the Readout System are shown on diagram 11 at the rear of this manual.

Timer

Timer U2126 establishes the timing sequence for all circuits within the Readout System This stage produces seven time-related output waveforms (see Fig. 3-28). The triangle waveform produced at pin 6 forms the basis for the remaining signals. The basic period of this triangle waveform is about 250 microseconds as controlled by RC network C1214-R1214. The triangle waveform is clipped and amplified by U1210 to form the trapezoidal output signal at pin 10. The amplitude of this output signal is exactly 15 volts as determined by V2126 (exact amplitude necessary to accurately encode data in plug-in units; see Encoding the Data). The Trigger output at pin 5 provides the switching signal for the Time-Slot Counter and Word Trigger stages.

The signals at pins 12, 13, 14, and 16 are produced only when the triangle waveform is on its negative slope and the trapezoidal waveform has reached the lower level. The timing sequence of these waveforms is very important to the correct operation of the Readout System (see expanded waveforms in Fig. 3-29). The Z-Axis Logic OFF Command at pin 14 is produced first. This negative-going signal provides a blanking pulse to the Z-Axis Logic stage (see diagram 2) to blank the CRT before the display is switched to the Readout System. It also produces the Strobe pulse through R2137, Q2138, and CR2142 to signal other stages within the Readout System to begin the sequence necessary

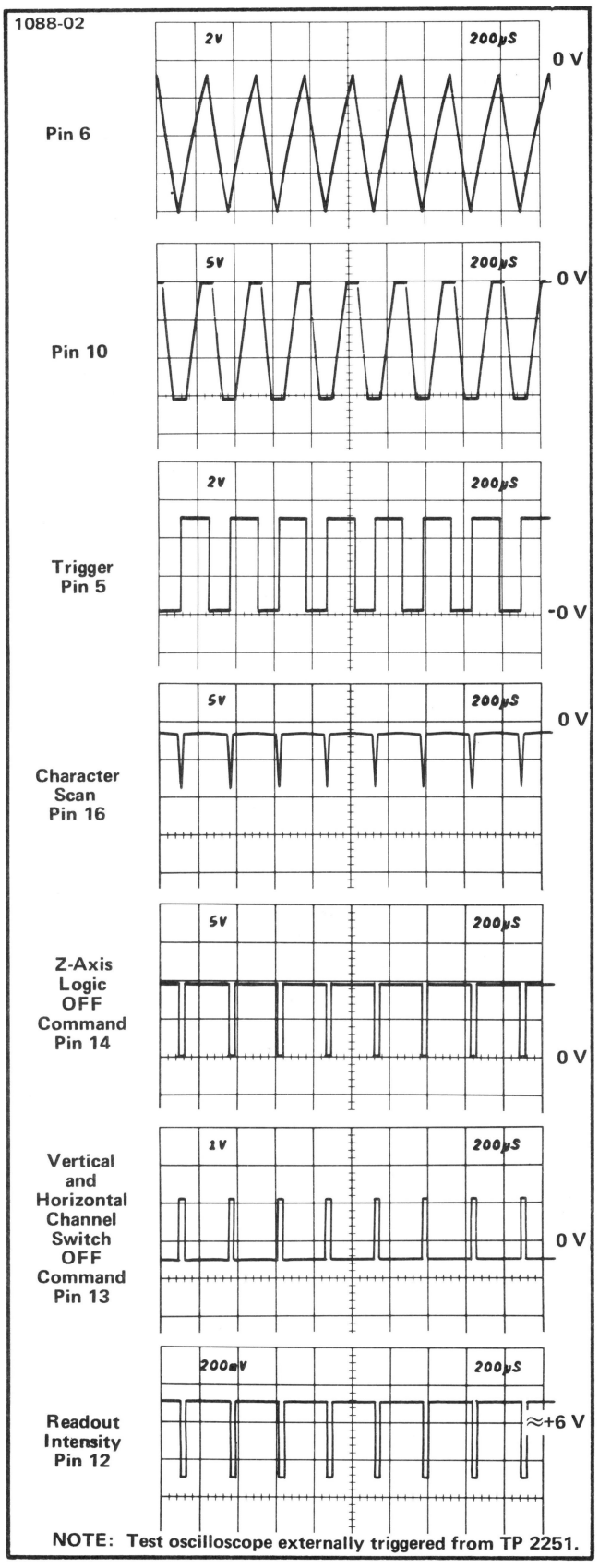

Fig. 3-28. Output waveforms of Timer stage.

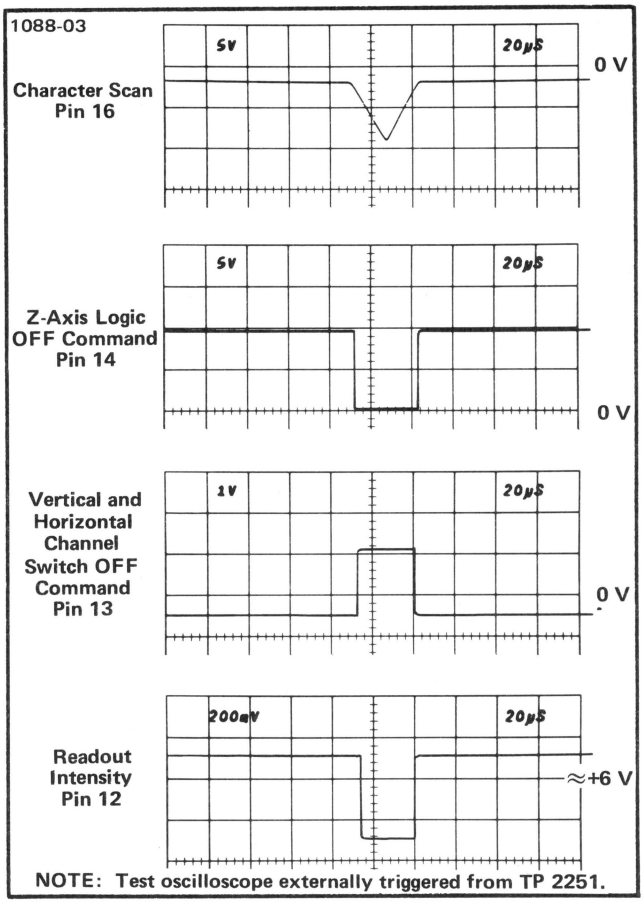

Fig. 3-29. Detail of outputs at pins 12, 13, 14, and 16 of U2126.

to produce a character. The collector of Q2138 is also connected to Character Generator No. 2, U2272 through C2140, CR2140. This activated U2272 during the quiescent period of the Strobe pulse (collector of Q2138 negative) and diverts the output current of Row Decoder U2185 to row 2. The purpose of this configuration is to prevent the Zeros Logic and Memory stage U2232 from storing incorrect data during the quiescent period of the Strobe pulse. When the Strobe pulse goes positive, CR2140 is reverse biased to disconnect Q2138 from U2272 and allow the Row Decoder stage to operate in the normal manner.

The next signal to be produced is the Vertical/Horizontal Channel Switch OFF Command at pin 13. This positive-going signal disconnects the plug-in signals in the vertical and horizontal deflection systems so the plug-in units do not control the position of the CRT beam during the readout display. The Ready signal derived from this output is connected to the Decimal Point Logic and Character Position Counter stage and the Format Generator stage (see diagram 11). The Readout Intensity output at pin 12 is produced next. This current is connected to the CRT Circuit to unblank the CRT to the intensity level determined by READOUT intensity control R2124. The Character Scan ramp at pin 16 started to go negative as this

timing sequence began. However, character-generation does not start until the readout intensity level has been established. The triangular Character Scan ramp runs negatively from about −2 volts to about −8.5 volts and then returns back to the original level. This waveform provides the scanning signal for the Character Generator stages (see diagram 11). The Full Character Scan adjustment R2128 sets the DC level of the Character Scan ramp to provide complete characters on the display.

The Timer stage operates in one of two modes as controlled by the Display-Skip level at pin 4. The basic mode just described is a condition which does not occur unless all ten characters of each word (60 characters total) are displayed on the CRT. Under typical conditions only a few characters are displayed in each word. The Display-Skip level at pin 4 determines the period of the Timer output signal. When a character is to be generated, pin 4 is LO and the circuit operates as just described. However, when a character is not to be displayed, a HI level is applied to pin 4 of U2126 through CR2125 from the Display-Skip Generator stage. This signal causes the Timer to shorten its period of operation to about 210 microseconds. The waveforms shown in Fig. 3-30 show the operation of the Timer stage when the Display-Skip condition occurs for all positions in a word. Notice that there is no output at pin 12, 13, 14, and 16 under this condition. This means that the CRT display is not interrupted to display characters. Also notice that the triangle waveform at pin 6 does not go as far negative and that the negative portion of the trapezoidal waveform at pin 10 is shorter. Complete details on operation of the Display-Skip Generator are given later.

The Single-Shot Lockout level at pin 2 determines the operating mode of U2126. If this level is LO, the Timer operates as just described. However, if the Single-Shot Lockout stage sets a HI level at this pin, the Timer stage is locked out and can not produce any output signals (see Single-Shot Lockout description for further information).

The READOUT intensity control R2124 sets the intensity of the readout display independently of the INTENSITY control. The READOUT intensity control also provides a means of turning the Readout System off when a readout display is not desired. When R2124 is turned fully counterclockwise, switch S102 opens. The current to pin 11 of U2126 is interrupted and at the same time a positive voltage is applied to pin 4 through R2122 and CR2124. This positive voltage switches the stage to the same conditions as were present under the Display-Skip condition. Therefore, the CRT display is not interrupted to present characters. However, time-slot pulse continue to be generated.

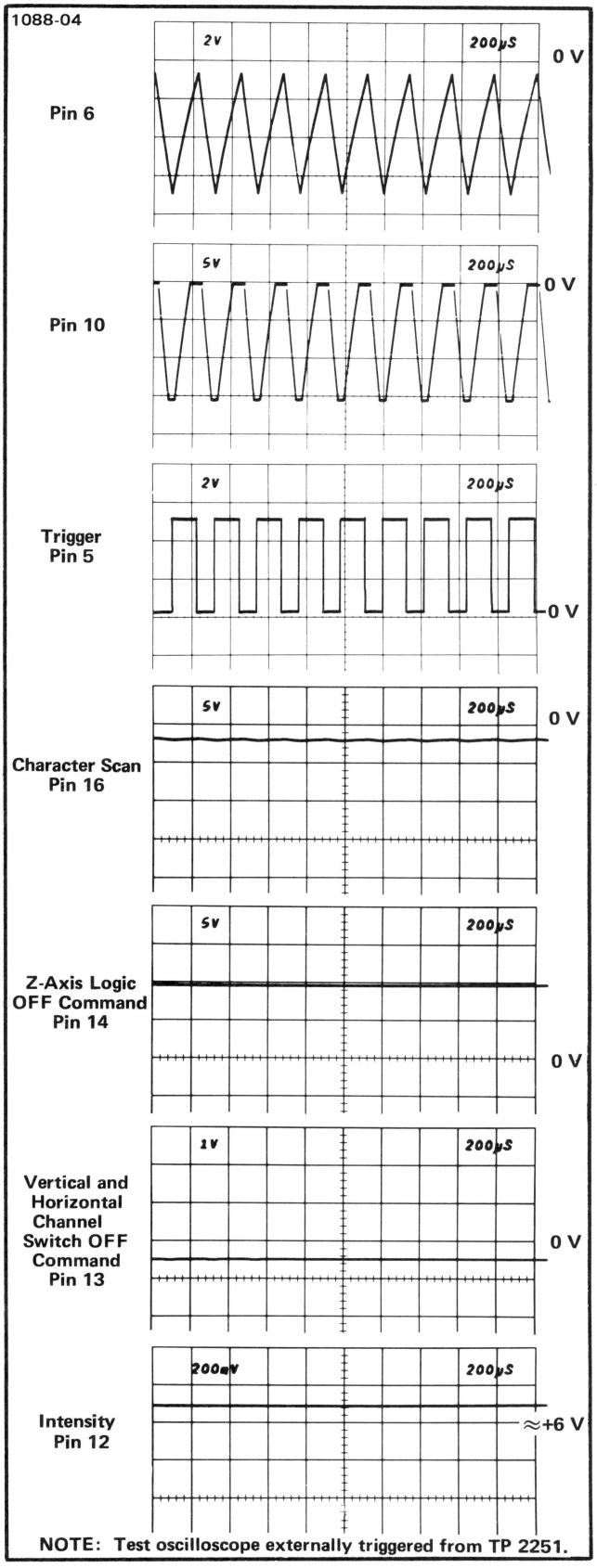

Fig. 3-30. Timer stage operation when Display-Skip condition occurs.

Time-Slot Counter

Time-Slot Counter U2126 is a sequential switch which directs the trapezoidal waveform input at pin 8 to one of its 10 output lines. These time-slot pulses are used to interrogate the plug-in units to obtain data for the Readout System. The Trigger pulse at pin 15 switches the Time-Slot Counter to the next output line; the output signal is sequenced consecutively from time-slot 1 through time-slot 10. Fig. 3-31 shows the time-relationship of the time-slot pulses. Notice that only one of the lines carries a time-slot pulse at any given time. When time-slot 10 is completed, a negative-going End-of-Word pulse is produced at pin 2. The End-of-Word pulse provides a drive pulse for the Word Trigger stage and also provides an enabling level to the Display-Skip Generator during time-slot 1 only.

Pin 16 is a reset input for the Time-Slot Counter. When this pin is held LO, the Time-Slot Counter resets to time-slot 1. The Time-Slot Counter can be reset in this manner only when a Jump signal is received by U2155C (see following discussion).

Word Trigger

The Word Trigger stage is made up of the 4 two-input NOR gates contained in U2155. Quiescently, pin 2 of U2155A is LO as established by the operating conditions of U2155D and U2155C. Therefore, the LO End-of-Word pulse produced by the Time-Slot Counter results in a HI level at pin 1 of U2155A. This level is inverted by U2155B to provide a negative-going advance pulse to the Channel Counter.

An advance pulse is also produced by U2155A when a Jump signal is received at pin 8 of U2155C. This condition can occur during any time-slot (see Row Decoder for further information on origin of the Jump signal). U2155D and U2155C are connected as a bistable flip-flop. The positive-going Jump signal at pin 8 of U2155C produces a LO at pin 10. This LO is inverted by U2155D to produce a HI at pin 13, which allows pin 9 of U2155C to be pulled HI through R2155. The flip-flop has now been set and it remains in this condition until reset, even though the Jump signal at pin 8 returns to its LO level. The HI output level at pin 13 turns on Q2159 through R2158 to pull pin 16 of the Time-Slot Counter LO. This resets the Time-Slot Counter to time-slot 1 and holds it there until U2155C is reset. At the same time, a HI level is applied to pin 4 of the Timer through CR2125 and CR2124. This HI level causes the Timer to operate in the display-skip mode so that a character is not generated.

The next Trigger pulse is not recognized by the Time-Slot Counter since U2159 is locked in time-slot 1 by U2155. However, this Trigger pulse resets the Word Trigger

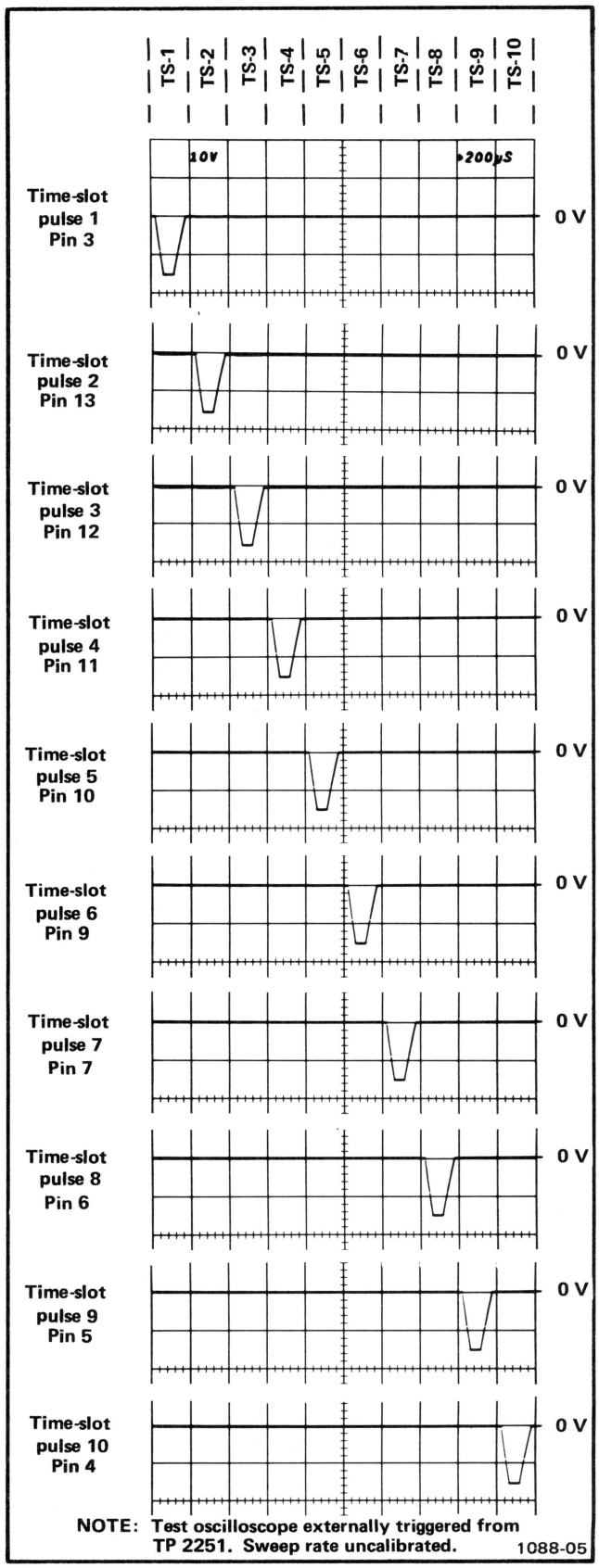

Fig. 3-31. Time relationship of the time-slot (TS) pulses produced by U2126.

stage through C2155. Pin 13 of U2155D goes LO to enable the Time-Slot Counter and Timer stages for the next time-slot pulse. At the same time, the negative-going edge produced at U2155D switches output states which is connected to pin 3 of U2155D. This results in a negative-going Word Trigger output at pin 4 of U2155B to advance the Channel Counter to the next word. When the next Trigger pulse is received at pin 15, the Time-Slot Counter returns to the normal sequence of operation and produces an output on the time-slot 1 line.

Channel Counter

The Channel Counter, made up of integrated circuit U2250 is a binary counter which produces the Channel Address code for the Column and Row Decoder stages and the Format Generator stage. This code instructs these stages to sequentially select and display the six channels of data from the plug-in units. The input channel which is displayed with each combination of the Channel Address code is given in the discussion of the applicable stages.

Single-Shot Lockout

Q2108, Q2117, and U2120 makes up the Single-Shot Lockout stage. This stage allows a single readout frame (Six complete words) to be displayed on the CRT, after which the Readout System is locked out so further readout displays are not presented until the circuit is reset. U2120C and U2120B are connected to form a bistable flip-flop. For normal operation, pin 3 of U2120 is pulled HI through R2108. This activates U2120C to result in a LO output level at pin 10. This level enables the Timer stage so it can operate in the free-running manner as described previously. The LO at pin 10 of U2120C is also applied to pin 5 of U2120B. Since pin 6 of U2120A is LO, U2120B is disabled and its output goes HI.

The output of this stage remains LO to allow U2126 to operate in the free-running mode until a LO is received at pin 8 of U2120C. When this occurs, the output level at pin 10 of U2120C does not change immediately. However, the Readout System is now enabled as far as the single-shot lockout function is concerned. If the Channel Counter has not completed word six (Channel 2 of the Horizontal unit), the Readout System continues to operate in the normal manner. However, when word six is completed, a positive-going End-of-Frame pulse is produced at pin 9 of U2120B as the Channel Counter shifts to the code necessary to display word one. This pulse is coupled to pin 3 of U2120A and pin 12 of U2120D. The momentary HI at pin 3 activates U2120B and its output goes LO to disable U2120C (pin 3 already LO). The output of U2120C goes HI to disable the Timer so it operates in the display-skip mode. The HI at pin 10 of U2120C also holds U2120B enabled so it maintains control of the flip-flop.

The Single-Shot Lockout stage remains in this condition until a positive-going trigger pulse is applied to pin 8 of U2120C. This trigger pulse produces a LO at pin 10 of U2120C which enables U2120B and disables U2120C. Now, the Timer can operate in the normal manner for another complete frame. When word six is completed, the Channel Counter produces another End-of-Frame pulse to again lock out the Timer stage.

Encoding the Data

Data is conveyed from the plug-in units to the Readout System in the form of an analog code having up to 11 current levels (from zero to one milliampere in 100 microampere steps). The characters which can be selected by the encoded data are shown on the Character Selection Matrix (see Fig. 3-25). Each character requires two currents to define it; these currents are identified as the column current and the row current which correspond to the column and row of the matrix. The column and row data is encoded by resistive programming in the plug-in units. Fig. 3-32 shows a typical encoding scheme for a voltage-sensing amplifier plug-in unit. Notice that the 10 time-slot (TS) pulses produced by the Time-Slot Counter stage are connected to the plug-in unit. However, time-slots 5, 6, 7, and 10 are not used by the plug-in unit to encode data when using the Standard Readout Format (see Table 3-2 for Standard Readout Format). The amplitude of the time-slot pulses is exactly −15 volts as determined by the Timer stage. Therefore, the resultant output current from the plug-in units can be accurately controlled by the programming resistors in the plug-in units.

For example, in Fig. 3-32, resistors R10 through R90 control the row analog data which is connected back to the Readout System. These resistors are of fixed value and define the format in which the information will be presented by the Readout System. Fig. 3-33A shows an idealized output current waveform of row analog data which results from the 10 time-slot pulses. Each of the steps of current shown in these waveforms corresponds to 100 microamperes of current. The row numbers on the left-hand side of the waveform correspond to the rows in the Character Selection Matrix shown in Fig. 3-35. The row analog data is connected back to the Readout System via terminal B37 of the plug-in interface.

The Column analog data is defined by resistors R110 through R190. The program resistors are connected to the time-slot lines by switch closures to encode the desired data. The data as encoded by the circuit shown in Fig. 3-32 indicates a 100 microvolt sensitivity with the display inverted and calibrated vertical deflection factors. This results in the idealized output current waveforms shown in Fig. 3-33B at the column analog data output, terminal A37 of the plug-in interface. Resistor R111, connected between time-slot 1 and the column analog data output, encodes two units of current during time-slot 1. Referring to the

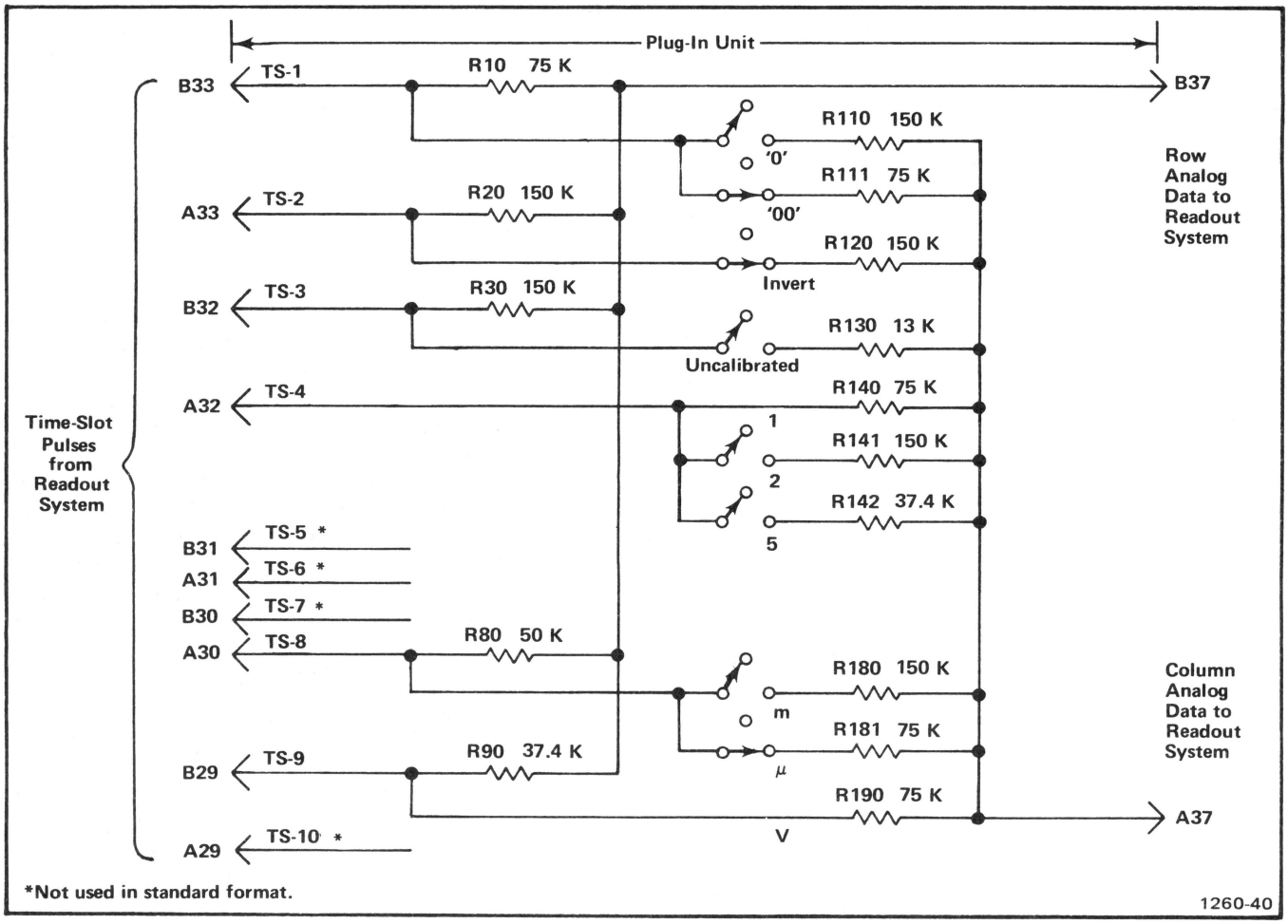

Fig. 3-32. Typical encoding scheme for voltage-sensing amplifier plug-in unit. Coding shown for deflection factor of 100 microvolts.

Character Selection Matrix, two units of column current along with the two units of row current encoded by R10 (row 3) indicates that two zeros should be added to the display. Resistor R120 adds one unit of column current during time-slot 2 and along with the one unit of current from the row output, the Readout System is instructed to add an invert arrow to the display. R130 is not connected to the time-slot 3 line since the vertical deflection factors are calibrated. Therefore, there is no column current output during this time-slot and there is no display on the CRT (see Display-Skip Generator for further information). During time-slot 4, two units of column current are encoded by R140. There is no row current encoded during this time-slot and this results in the numeral 1 being displayed on the CRT. Neither row nor column analog data is encoded during time-slots 5, 6, and 7 as defined by the Standard Readout Format. During time-slot 8, two units of column current and three units of row current are encoded by resistors R181 and R80 respectively. This addresses the μ prefix in the Character Selection Matrix. The final data output is provided from time-slot 9 by R190 connected to the column output and R90 to the row output. These resistors encode three units of column current and four units of row current to cause a V (volts) to be displayed. Time-slot 10 is not encoded in accordance with the Standard Readout Format. The resultant CRT readout will be $\downarrow$ 100 μV.

In the above example, the row analog data was programmed to define which row of the Character Selection Matrix was addressed to obtain information in each time-slot. The column data changes to encode the applicable readout data as the operating conditions change. For example, if the variable control of the plug-in unit was activated, R130 would be connected between time-slot 3 and the column analog data output lines. This encodes 10 units of column current (see shaded area in time-slot 3 of the waveform shown in Fig. 3-33B). Since one unit of row current is also encoded during this time-slot by R30, a $>$ symbol is added to the display. The CRT readout will now say $\downarrow$ $>$100 μV. In a similar manner, the other switches can change the encoded data for the column output and thereby change the readout display. See the descriptions which follow for decoding this information.

The column analog data encoded by the plug-in can be modified by attenuator probes connected to the input

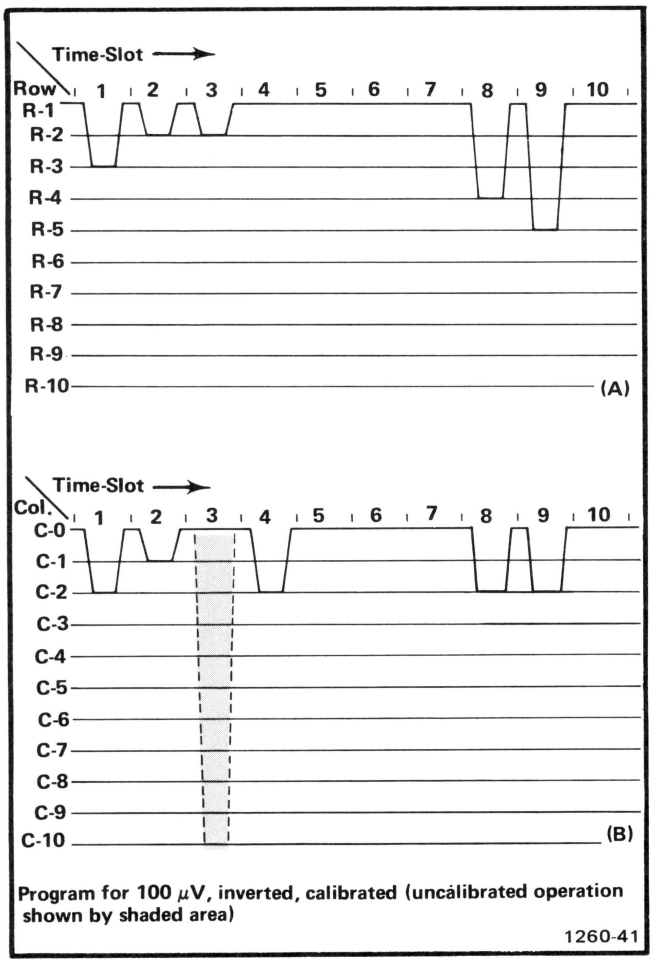

Fig. 3-33. Idealized current waveforms of: (A) Row analog data, (B) Column analog data.

connectors of vertical plug-in units. A special coding ring around the input connector of the plug-in unit senses the attenuation ratio of the probe (with readout-coded probes only). The probe contains a resistor which results in additional column current. For example, if a 10X attenuator probe is connected to a plug-in with the coding for 100 microvolts as shown in Fig. 3-32, an additional unit of current is added to the column analog data during time-slot 1. Since two units of current were encoded by R111 (see Fig. 3-32), this additional current results in a total of three units of column analog current during this time-slot. Referring to the Character Selection Matrix, three units of column current along with the two units of row current encoded by R10 indicates that the prefix should be reduced. Since this instruction occurs in the same time-slot which previously indicated that two zeros should be added to the display and only one instruction can be encoded during a time-slot, the zeros do not appear in the display. The CRT readout will now be changed to 1 mV (readout) program produced by plug-in same as for previous example.

Likewise, if a 100X readout-coded probe is connected to the input of the plug-in unit, the column current during time-slot 1 will be increased two units for a total of four units of column current. This addresses an instruction in the Character Selection Matrix which reduces the prefix and adds one zero to the display. The resultant CRT readout with the previous program is 10 mV.

Three other lines of information are connected from the plug-in compartments to the Readout System. The column and row analog data from channel 2 of a dual-channel plug-in are connected to the Readout System through terminals A38 and B38 of the plug-in interface, respectively. Force readout information is encoded on terminal A35; function of this input is described under Column and Row Data Switches.

The preceding information gave a typical example of encoding data from an amplifier plug-in unit. Specific encoding data and circuitry is shown in the individual plug-in unit manual.

Column and Row Data Switches

The readout data from the plug-in units is connected to the Column and Row Data Switch stages in the Readout System. A column-data line and a row-data line convey analog data from each of the eight data sources (two channels from each of the four plug-in compartments).

TABLE 3-3

Channel Address

Pin 1 U2232 "Identify" Command	Pin 11 U2250	Pin 8 U2250	Pin 9 U2250	Channel Selected
HI	HI	HI	HI	Channel 1 Left Vertical
HI	HI	HI	LO	Channel 2 Left Vertical
HI	HI	LO	HI	Channel 1 Right Vertical
HI	HI	LO	LO	Channel 2 Right Vertical
HI	LO	HI	HI	Channel 1 Horizontal
HI	LO	HI	LO	Channel 2 Horizontal

The Column Data Switch U2190 and the Row Data Switch U2180 receive the Channel Address No. 1 code from the Channel Counter. This binary code directs the Column Data Switch and the Row Data Switch as to which channel should be the source of the readout data. Table 3-3

gives the eight combinations of the Channel Address No. 1 code and the resultant channel which is selected with each combination. These stages have nine inputs and provide a single time-multiplexed output at pin 7 which includes the information from all of the input channels. Eight of the nine inputs to each stage originate in the plug-in units; the ninth input comes from a special data-encoding network composed of resistors R2201 through R2209 and R2191 through R2199 (see Zeros Logic and Memory description for further information on ninth channel).

In addition to the data inputs from the plug-in units, channel-inhibit inputs are provided from each of the plug-in units. The channel inhibit lines are LO only when the associated plug-in unit has been selected for display. When a plug-in unit is not selected, the respective line is HI which forward biases the associated diode CR2162, CR2163, CR2167, CR2166, CR2171, CR2170, CR2175, or CR1174 to by-pass the encoded data from this plug-in. However, since it may be desired to display information from special-purpose plug-ins even though they do not produce a normal waveform display on the CRT, a feature is provided to over-ride the channel inhibit. This is done by applying a LO to the associated forcing over-ride input. The LO level diverts the HI channel inhibit current and allows the data from this plug-in unit to reach the Column Data Switch, even though it has not been selected for display by the mode switches.

Display-Skip Generator

The Display-Skip Generator, Q2215, Q2223, Q2229, and Q2225 monitors the time-multiplexed column data at the output of the Column Data Switch during each time-slot to determine if the information at this point is valid data which should result in a CRT display. The voltage at the base of Q2215B is set by divider R2219, R2220, and R2221. Quiescently, there is about 100 microamperes of current flowing through R2213 and R2214 from Q2240 and the Zeros Logic and Memory stage (purpose of this quiescent current will be discussed in connection with the Zeros Logic and Memory stage). This current biases Q2215A so its base is about 0.2 volt more positive than the base of Q2215B in the absence of column data. Therefore, since Q2215A and Q2215B are connected as a comparator, Q2215A will remain on unless its base is pulled more negative than the base of Q2215B. The analog data output from the Column Data Switch produces a 0.5 volt change at the base of Q2215A for each unit of column current that has been encoded by the plug-in unit. Therefore, whenever any information appears at the output of the Column Data Switch, the base of Q2215A is pulled more negative than the base of Q2215B resulting in a negative (LO) Display-Skip output to the Timer stage through Q2225. Recall that a LO was necessary at the skip input of the Timer so it could perform the complete sequence necessary to display a character.

Q2223-Q2229 also provide display-skip action. The End-of-Word level connected to their emitters through R2229 is LO only during time-slot 1. This means that Q2223-Q2229 are enabled only during time-slot. These transistors allow the Zeros Logic and Memory stage to generate a display-skip signal during time-slot 1 when information has been stored in memory which is not to be displayed on the CRT (further information given under Zeros Logic and Memory discussion).

Column and Row Decoder

The Column Decoder U2244 and Row Decoder U2185 sense the magnitude of the analog voltages at their inputs and produce a binary output on one of ten lines corresponding to the column or row data which was encoded by the plug-in. These outputs provide the Column Digital Data and Row Digital Data which is used by the Character Generator stages to select the desired character for display on the CRT. The column and row data is also used throughout the Readout System to perform other functions. The input current at pin 9 of the Column Decoder stage is steered to only one of the ten Column Digital Data outputs. The size of the character which will be displayed on the CRT is determined by the value of R2227. When a display-skip signal is present (collector of Q2225 is HI), pin 9 is pulled HI through CR2226. This ensures that no current is connected to the Character Generator stage under this condition. Notice the corresponding input on the Row Decoder. This input is connected to ground and causes only one of the ten row outputs to saturate to ground.

The network at the input of the Row Decoder, made up of Q2153 and its associated components, is a Row 13 detector which produces the Jump command. This row current is encoded by special-purpose plug-ins to cause all or part of a word to be jumped. Whenever row 13 (thirteen units of row current; 1.3 milliamperes) is encoded, the base of Q2153 is pulled negative enough so that this transistor is reverse biased to produce a HI Jump output at its collector. This Jump command is connected to the Word Trigger stage (diagram 10) to advance the Channel Counter stage to the next word and to reset the Time-Slot Counter to time-slot 1.

Zeros Logic and Memory

The Zeros Logic and Memory stage U2232 stores data encoded by the plug-in units to provide zeros-adding and prefix-shifting logic for the Readout System. The Strobe pulse at pin 15 goes positive when the data has stabilized and can be inspected. This activates the Zeros Logic and Memory stage so it can store the encoded data. A block representation of the memory sequence is shown in Fig. 3-34. Typical output waveforms for the five possible input conditions that can occur are shown in Fig. 3-35. When time-slot 1 occurs, a store command is given to all of the

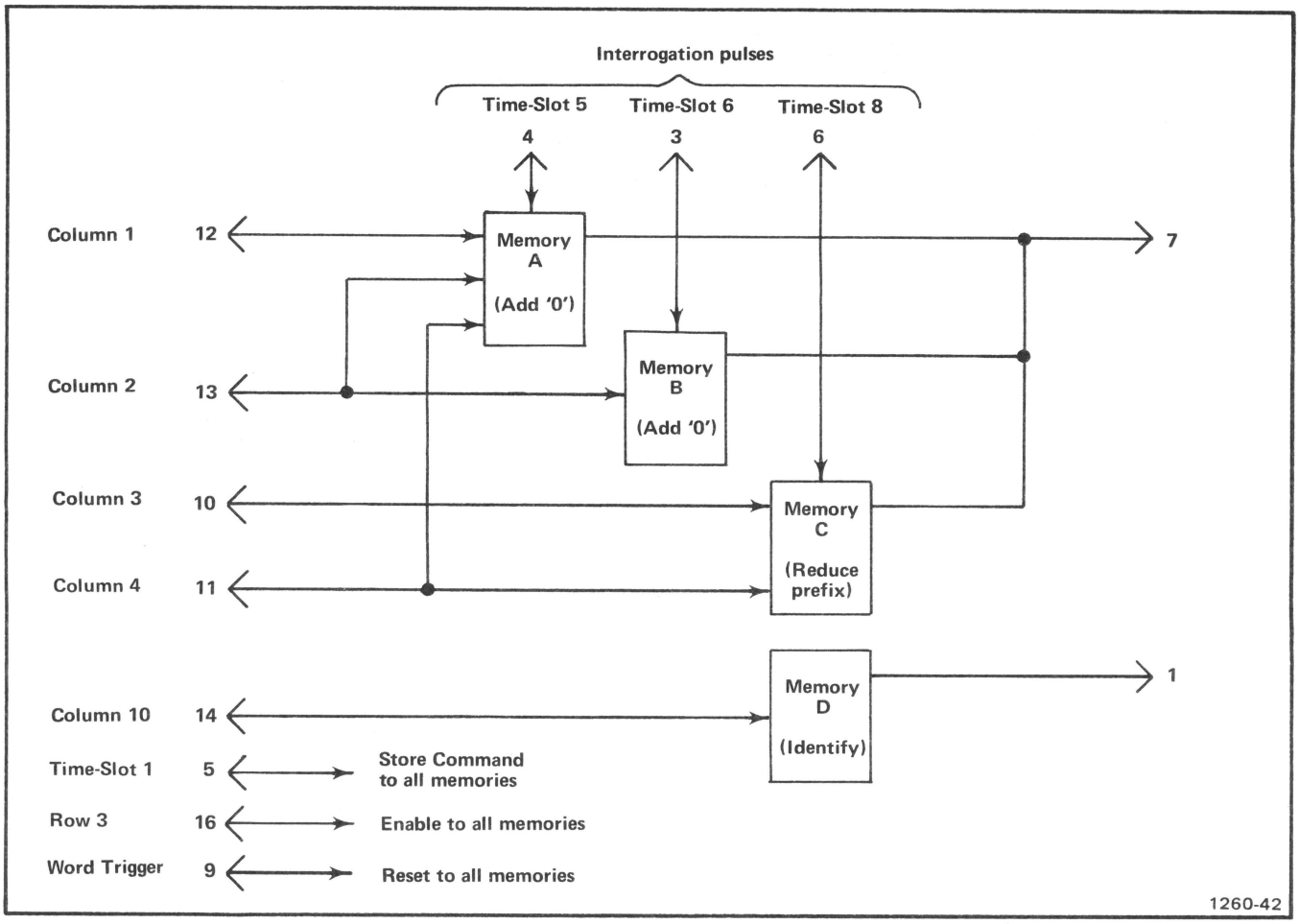

Fig. 3-34. Block representation of memory sequence in U2232.

memories. If the plug-in unit encoded data for column 1, 2, 3, 4, or 10 during time-slot 1, the appropriate memory (or memories) is set. Notice that row 3 information from the Row Decoder must also be present at pin 16 for data to be stored in the memory of U2232. If data was encoded during time-slot 1, a negative-going output is produced at pin 7 as the memories are being set. This negative-going pulse is connected to the base of Q2229 in the Display-Skip Generator to produce a Display-Skip output. Since the information that was encoded during time-slot 1 was only provided to set the memories and was not intended to be displayed on the CRT at this time, the display-skip output prevents a readout display during this time-slot.

During time-slot 5, memory A is interrogated. If information was stored in this memory, a positive-going output is produced at pin 7. This pulse is connected to pin 10 of the Column Decoder through Q2240 to add one unit of current at the input of the Column Decoder. This produces a zero after the character displayed on the CRT during time-slot 4. During time-slot 6, memory B is interrogated to see if another zero should be added. If another zero is necessary, a second positive output is produced at pin 7 which again results in a column 1 output from the Column Decoder and a second zero in the CRT display.

Finally, memory C is interrogated during time-slot 8 to obtain information on whether the prefix should be reduced or left at the value which was encoded. If data has been encoded which calls for a reduction in prefix, a negative-going output level is produced at pin 7. This negative level subtracts one unit of column current from the data at the input to the Column Decoder. Notice on the Character Selection Matrix of Fig. 3-24 that a reduction of one column when row 4 is programmed results in a one unit reduction of the prefix. For example, with the 100 μV program shown in Fig. 3-31, if the data received from the plug-in called for a reduction in prefix, the CRT readout would be changed to 1 mV (zeros deleted by program; see Encoding the Data).

The 100 microamperes of quiescent current through R2213 and R2214 that was provided by Q2240 (see Display-Skip Generator) allows the prefix to be reduced

Input Pins of Zeros Logic & Memory	Command	Time Slot
14	IDENTIFY	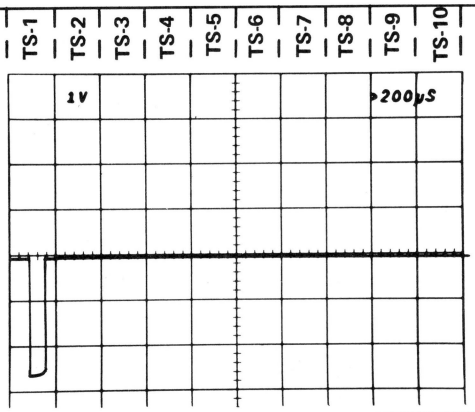 0 V
12	Add one zero	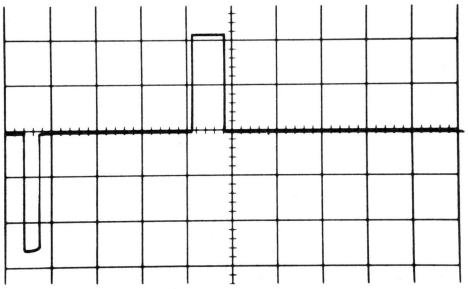 0 V
13	Add two zeros	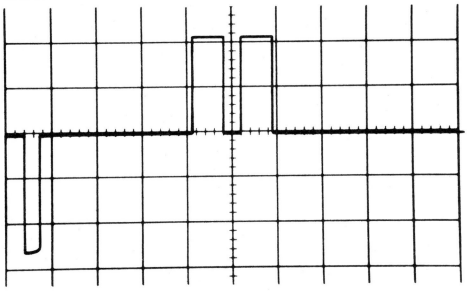 0 V
10	Decrease prefix	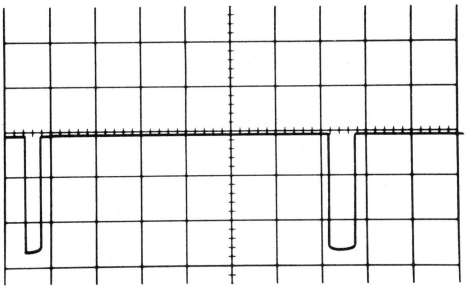 0 V
11	Decrease prefix and add one zero	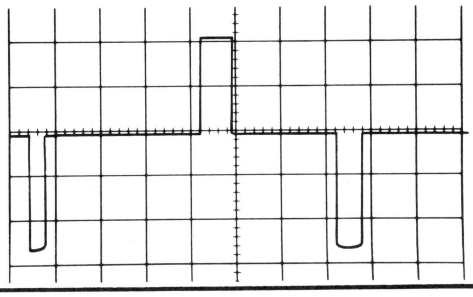 0 V

(1088) 1429-03

Fig. 3-35. Typical output waveforms for Zeros Logic and Memory stage operation (at pin 7 of U2232).

from m (100 microamperes column current; column 1) to no prefix (zero column current; column zero) so only the unit of measurement encoded during time-slot 9 is displayed. Notice that reducing the prefix program from column 1 to column 0 programs the Readout System to not display a character at this readout location.

A further feature of the Zeros Logic and Memory is the Identify function. If 10 units of column current are encoded by the plug-in unit along with row 3 during time-slot 1, the Zeros Logic and Memory produces a negative-going output pulse at pin 1 which switches the Column Data Switch and Row Data Switch to the ninth channel. Then, time-slot pulses 2 through 9 encode an output current through resistors R2191-R2199 for column data and R2201-R2209 for row data. This provides the currents necessary to display the word IDENTIFY on the CRT in the word position allotted to the channel which originated the Identify command. After completion of this word, the Column Data Switch and Row Data Switch continue with the next word in the sequence.

The Word Trigger signal from the Word Trigger stage is connected to pin 9 of U2232 through C2242. At the end of each word of readout information, this pulse goes LO. This erases the four memories in the Zeros Logic and Memory in preparation for the data to be received from the next channel.

Character Generators

The Character Generator stage consists of five similar integrated circuits U2270, U2272, U2274, U2276, and U2278, which generate the X (horizontal) and Y (vertical) outputs at pins 16 and 1 respectively to produce the character displayed on the CRT. Each integrated circuit can produce 10 individual characters. U2270, which is designated as the "Numerals" Character Generator, can produce the numerals 0 through 9 shown in row 1 of the Character Selection Matrix (Fig. 3-24). U2272 can produce the symbols shown in row 2 of the Character Selection Matrix and U2274 produces the prefixes and some letters of the alphabet which are used as prefixes in row 4. U2276 and U2278 produce the remaining letters of the alphabet shown in rows 5 and 6 of the Character Selection Matrix. All of the stages receive the column digital data from Column Decoder U2244 in parallel. However, only one of the character generators receives row data at a particular time; only the stage which receives both row and column data is activated. For example, if column 2 is encoded by a plug-in unit, the five Character Generators are enabled so that either a 1, $<$ μ, V, or an N can be produced. However, if at the same time row 4 has also been encoded by the plug-in unit, only the Prefix Character Generator U2274 will produce an output to result in a μ displayed on the screen. This integrated circuit provides current outputs to the Format Generator which produce the selected character on the CRT. In a similar manner, any of the 50 characters shown in the Character Selection Matrix can be displayed by correct addressing of the row and column.

Decimal Point Logic and Character Position Counter

The Decimal Point Logic and Character Position Counter stage U2260 performs two functions. The first function is to produce a staircase current which is added to the X (horizontal) signal to space the characters horizontally on the CRT. After each character is generated, the negative-going edge of the Ready signal at pin 5 advances the Character Position Counter. This produces a current step output at pin 3 which, when added to the X signal, causes the next character to be produced one character space to the right. This stage can also be advanced when a Space instruction is encoded by the plug-in unit so that a space is left between the displayed characters on the CRT. Row 10 information from the Row Decoder is connected to pin 4 of U2260 through R2265. When row 10 and column 0 are encoded, the output of this stage advances one step to move the next character another space to the right. However, under this condition, no display is produced on the CRT during this time-slot.

Time-slot pulses 1, 2, and 3 are also connected to pin 4 of U2260 through VR2262, VR2263, and VR2264 respectively and R2262-R2265. This configuration adds a space to the displayed word during time-slots 1, 2, and 3 even if information is not encoded for display during these time-slots. With this feature, the information which is displayed during time-slot 4 (1-2-5 data) always starts in the fourth character position whether data has been displayed in the previous time-slots or not. Therefore, the resultant CRT display does not shift position as normal/invert or cal/uncal information is encoded by the plug-in. The Word Trigger pulse connected to pin 8 of U2260 through C2255 resets the Character Position Counter to the first character position at the end of each word.

The Decimal Point Logic portion of this stage allows decimal points to be added to the CRT display as encoded by the plug-in units. When row 7 is encoded in coincidence with columns 3 through 7 (usually encoded during time-slot 1), a decimal point is placed at one of the five locations on the CRT identified in row 7 of the Character Selection Matrix (Fig. 3-24). This instruction refers to the decimal point location in relation to the total number of characters that can be displayed on the CRT (see Fig. 3-36). For example, if column 3 and row 7 are encoded during time-lost 1, the system is instructed to place a decimal point in location No. 3. As shown in Fig. 3-36, this displays a decimal point before the third character that can be displayed on the CRT (first three time-slots produce a space whether data is encoded or not; see previous paragraph). The simultaneous application of row 7 data to the Y-input

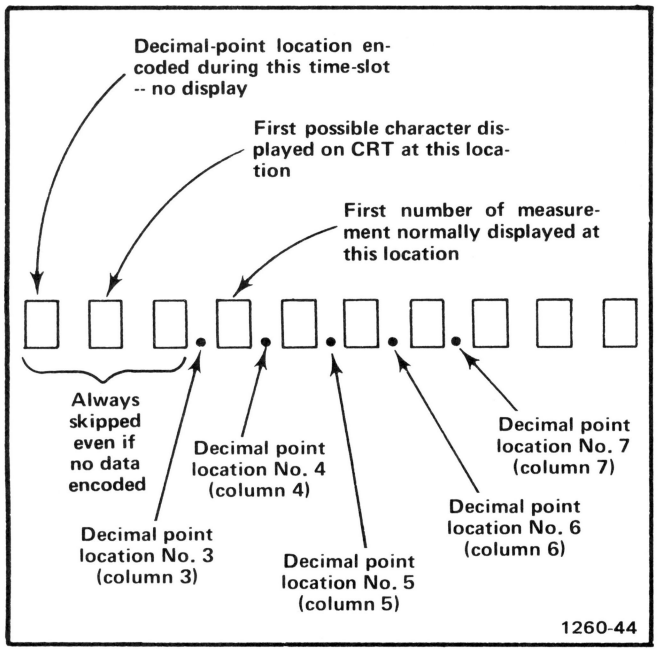

Fig. 3-36. Readout word relating 10 possible character locations to the decimal-point instructions that can be encoded and the resulting display.

of the Format Generator through R2280 raises the decimal point so it appears between the displayed characters.

When decimal-point data is encoded, the CRT is unblanked so a readout display is presented. However, since row 7 does not activate any of the five Character Generators, the CRT beam is not deflected but instead remains in a fixed position to display a decimal point between the characters along the bottom line of the readout word. After the decimal point is produced in the addressed location, the CRT beam returns to the location indicated by the Character Position Counter to produce the remainder of the display.

Format Generator

The X- and Y-deflection signals produced by the Character Generator stage, are connected to pins 2 and 7 respectively of Format Generator U2284. The Channel Address No. 2 code from the Channel Counter is also connected to pins 1, 8, and 15 of this stage. The Channel Address No. 2 code directs the Format Generator to add current to the X and Y signals to deflect the CRT beam to the area of the CRT which is associated with the plug-in channel that originated the information (see Fig. 3-24). The Channel Address No. 2 Code and the resultant word positions are shown in Table 3-4. In addition, the character position current from the Decimal Point Logic and Character Position stage is added to the X (horizontal) input signal to space the characters horizontally on the CRT (see previous discussion). The Ready signal at pin 13 (coincident with Vertical/Horizontal Channel Switch OFF Command) activates this stage when a character is to be displayed on the CRT.

TABLE 3-4

Channel Address No. 2 Code

Pin 11 U2250	Pin 8 U2250	Pin 9 U2250	Channel Displayed
LO	LO	LO	Channel 1 Left Vertical
LO	LO	HI	Channel 2 Left Vertical
LO	HI	LO	Channel 1 Right Vertical
LO	HI	HI	Channel 2 Right Vertical
HI	LO	LO	Channel 1 Horizontal
HI	LO	HI	Channel 2 Horizontal

Y-Output Amplifiers

The Y-output signal at pin 6 of U2284 is connected to the Y-Output Amplifier Q2287-Q2299. This stage provides a low impedance load for the Format Generator while providing isolation between the Readout System and the Vertical Amplifier. Vertical Separation adjustment R2291 changes the gain of this stage to control the vertical separation between the readout words displayed at the top and bottom of the graticule area.

X-Output Amplifier

The X-Output Amplifier Q2286-Q2296 operates similarly to the Y-Output Amplifier to provide the horizontal deflection from the readout signal available at pin 4 of U2284. The gain of this stage is fixed by the values of the resistors in the circuit.

Display Sequence

Fig. 3-37 shows a flow chart for the Readout System. This chart illustrates the sequence of events which occurs in the Readout System each time a character is generated and displayed on the CRT.

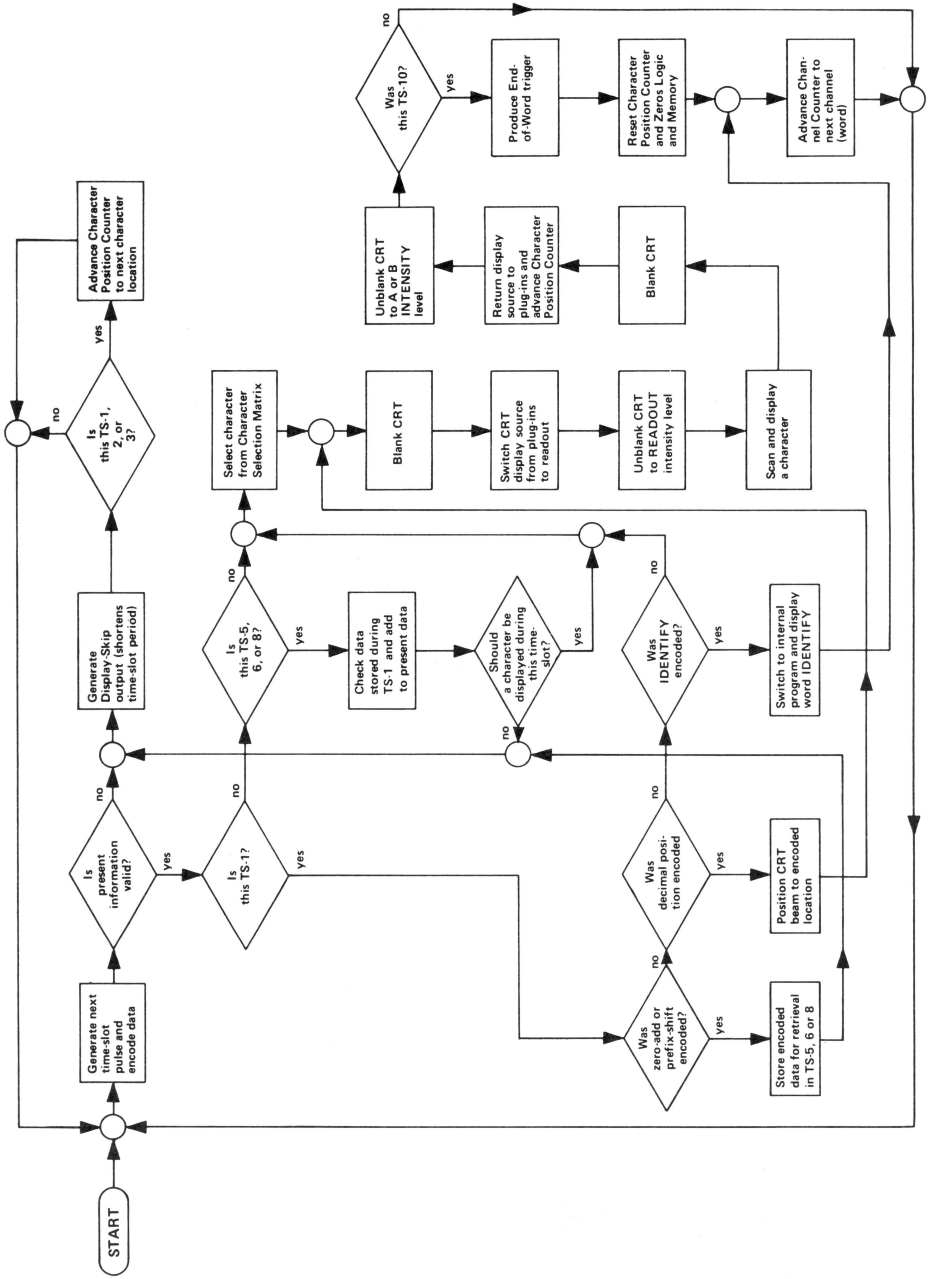

Fig. 3-37. Flow chart of character generation sequence by the Readout System.

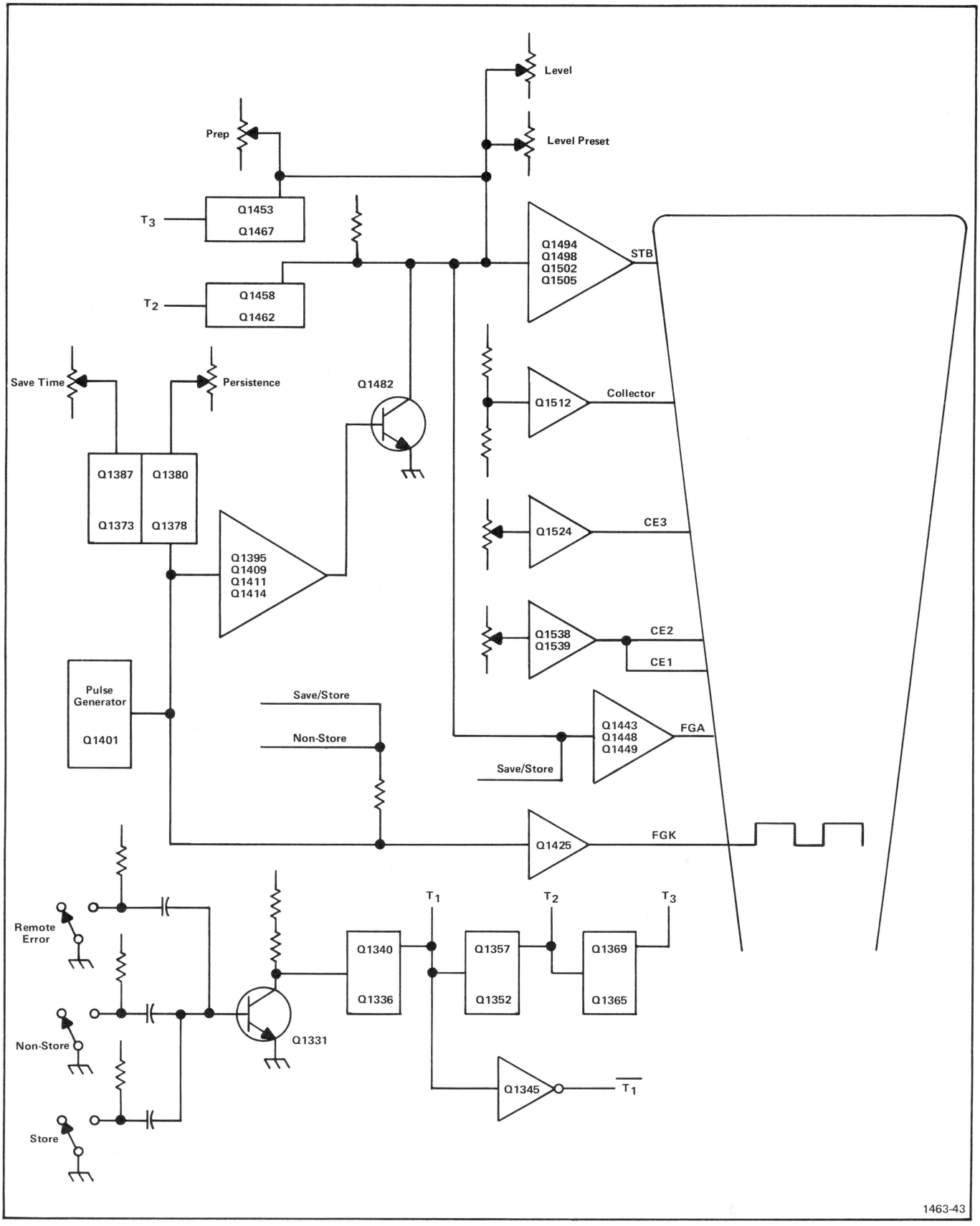

Fig. 3-38. Basic Storage Block Diagram.

STORAGE BOARD CIRCUITRY

The Cathode-Ray tube of the 7613 is a standard transmission halftone storage tube. The collector electrode is a coarse mesh which accelerates electrons toward the target area. The target is a fine mesh with a highly insulative dielectric layer deposited on it. It is in the dielectric layer that storage occurs. The flood guns cover the entire storage target with a continuous stream of low velocity electrons; these electrons are prevented from reaching the phosphor screen unless a display has been written on the storage target.

The collimation bands are used as a lens which uniformly distributes flood-gun electrons over the storage target area. Adjustment R1531 controls the output voltage of the collimation amplifier (Q1538 and Q1539) used for the first two bands. In the non-store mode, the collimation bands have no control over the CRT. Adjustment R1521 controls the emitter-followers output that controls the third collimation band. Transistor Q1512 and voltage divider R1510 and R1511 establishes the collector voltage for the CRT. (See storage basic block diagram Fig. 3-38.)

Switching from the non-store mode to the store mode is done by grounding the store line. This enables the ERASE switch, REMOTE ERASE switch, and the SAVE switch. Transistor Q1329 is biased on in the non-store mode. The output of Q1329 is coupled to the base of Q1331, the input to the Erase Timing Generator. When transistor Q1331 is turned off, an erase cycle is started. In the store mode, transistor Q1329 is biased off and transistor Q1331 is biased on. When changing modes from non-storage to storage operation, an erase cycle is generated automatically. When the REMOTE ERASE switch is pressed, it grounds one side of capacitor C1318. Capacitor C1318 discharges in to the base circuitry of Q1331, turning it off momentarily. When the ERASE switch is pressed, Q1331 is biased off so that repetitive erase cycles can occur.

VARIABLE PERSISTENCE AND SAVE CIRCUITRY

Transistors Q1373 and Q1378 form a switch that allows either the PERSISTENCE control or the SAVETIME control to control the storage operation. Transistor Q1373 is on in the store mode without save. Transistor Q1378 is biased off and Q1380 is biased on. This allows the collector circuit of Q1380 to control the storage operation. Transistor Q1378 is turned on when resistor R1371 in the base circuit of Q1373 is grounded by the SAVE switch. This lowers the emitter voltage, allowing Q1378 to turn on and Q1373 to turn off. When transistor Q1373 turns off, Q1387 turns on, allowing the collector circuit of Q1387 to control the storage operation. See Fig. 3-39.

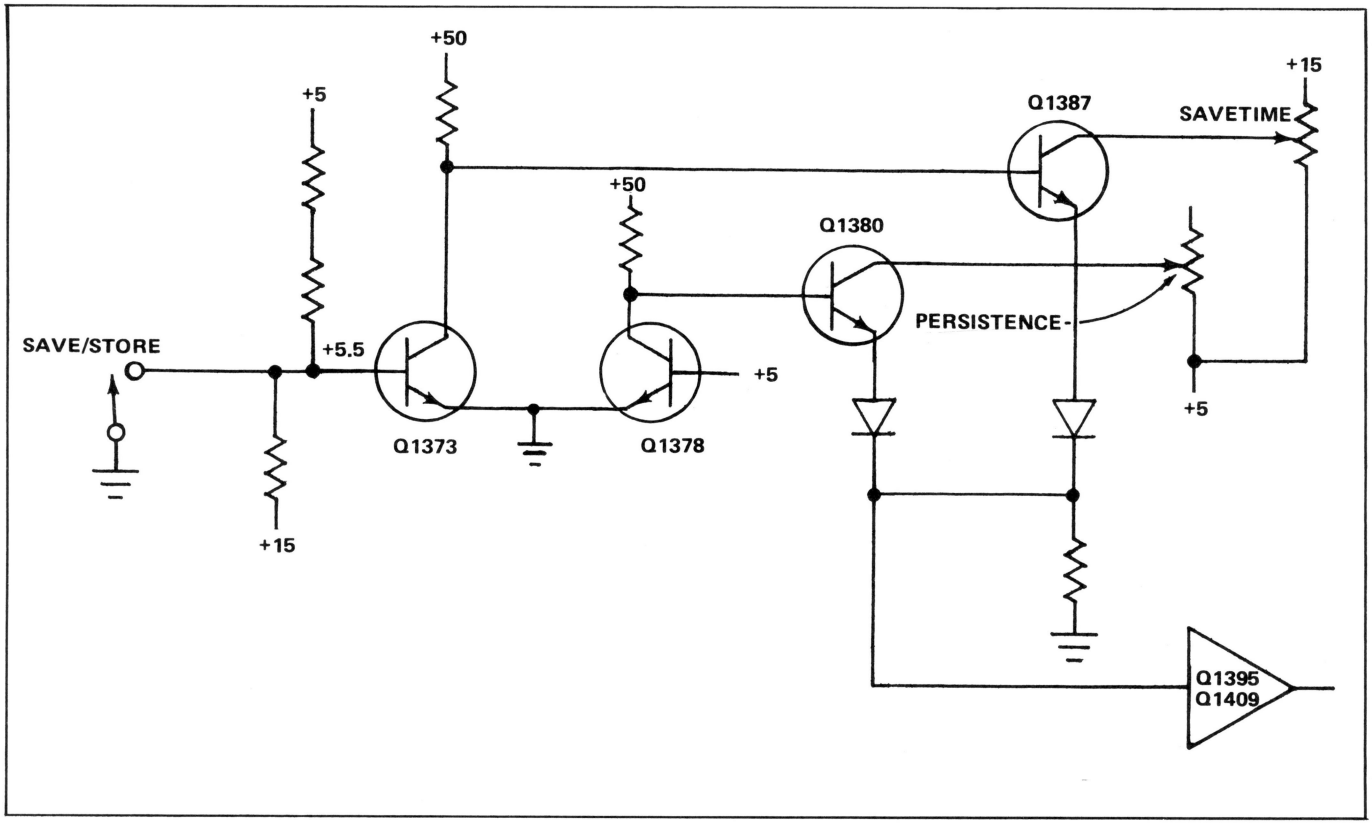

Fig. 3-39. Variable Persistence and Save switching circuit.

Semiconductor Q1401 is a programmable unijunction transistor that is used as a 100-millisecond pulse generator. Capacitor C1391 and resistor R1392 are the timing components along with the gate voltage divider circuit. Coupling capacitor C1406 couples the pulses to a current amplifier (Q1409 and Q1395). The pulses are direct coupled to a voltage amplifier (Q1411 and Q1414). In the variable persistence mode, the pulses are coupled to the Storage Target Backplate Amplifier. In the Save mode of storage, the pulses are coupled to the flood-gun cathodes through Q1425; this reduces the background intensity of the stored display. In the non-store mode, the timing elements are grounded and no pulses are generated.

ERASE TIMING GENERATOR

Transistors Q1336 and Q1340 form a 50-millisecond monostable multivibrator. The output is connected to transistor Q1345 (for inverting) and to coupling capacitor C1347. The outputs from this stage are called T_1 and $\overline{T_1}$. Capacitor C1347 couples the output signal ($\overline{T_1}$) to the base of transistor Q1352. Transistors Q1352 and Q1357 form a 10-millisecond monostable multivibrator. The output signal from this stage is called T_2 and is connected to coupling capacitor C1360, which couples T_2 to the base of transistor Q1365. Transistors Q1365 and Q1369 form a 400-millisecond monostable multivibrator. The output signal is called T_3. These monostable multivibrators are cascaded to provide a sequential train of pulses. See Fig. 3-40 for the basic block diagram of the Erase Timing Generator and idealized waveforms.

The pulses are connected to the Storage Target Backplate Amplifier and to the circuits controlling the flood-gun cathodes and anode. Pulse T_1 turns on transistor Q1423, which saturates Q1425, grounding the flood-gun cathodes. Pulse T_1 also provides a sweep lockout pulse that goes to the time-base plug-in unit through transistor Q1432, and a pulse that goes to the Flood-Gun Anode Amplifier. This applies a positive pulse to the flood-gun anode.

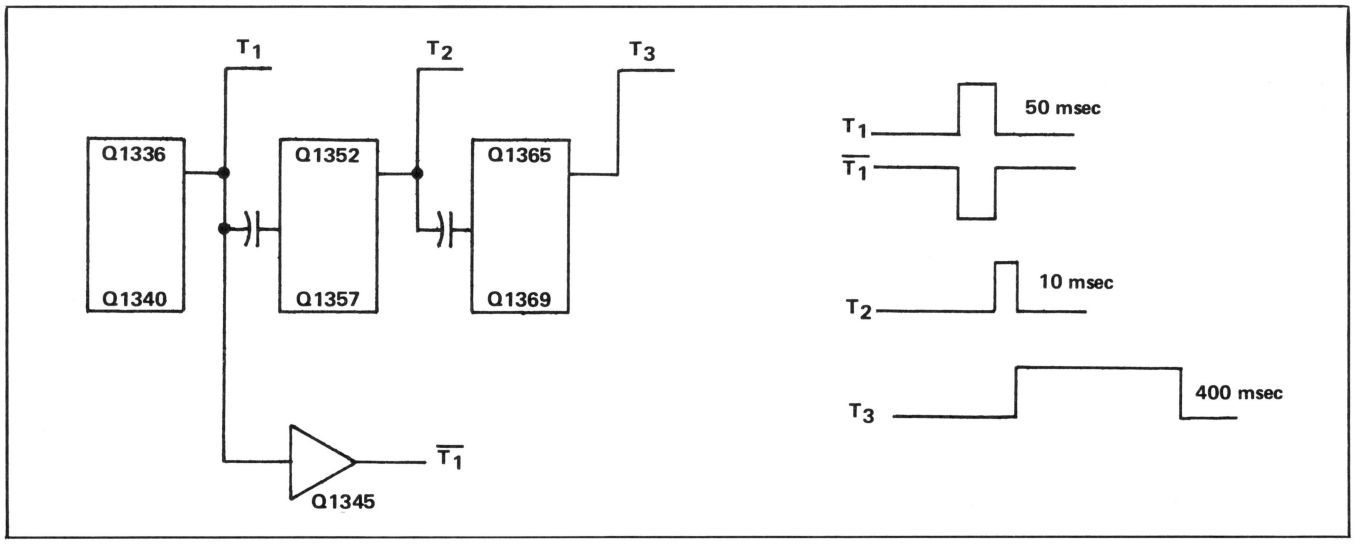

Fig. 3-40. Erase timing pulse generator.

STORAGE TARGET BACKPLATE AMPLIFIER

The Storage Target Backplate (STB) operational amplifier is a current-to-voltage conversion amplifier. It consists of transistors Q1494, Q1498, Q1502, and Q1505. The level control and the level preset adjustment provide quiescent control over the STB amplifier. During an erase cycle, pulses T_1, $\overline{T_1}$, T_2, and T_3 are generated. Operation of the Erase Pulse Generator is discussed with the Erase Pulse Operator circuit.

At time $\overline{T_1}$, the STB amplifier is pulsed with a negative pulse 50 ms in duration. This negative pulse causes a high positive level at the output of the STB amplifier. At time T_2, transistor Q1458 is turned on for 10 ms and Q1462 is turned off. When transistor Q1462 is off, CR1480 is forward biased so that current from the collector circuit of Q1482 is not part of the input current to the STB amplifier. This reduces the output voltage of the STB amplifier. During the T_3 pulse, transistor Q1453 turns on and transistor Q1467 turns off, allowing current from the collector circuit of Q1467 to go into the input of the STB amplifier. This raises the output voltage of the STB amplifier. See Fig. 3-41 for idealized waveforms.

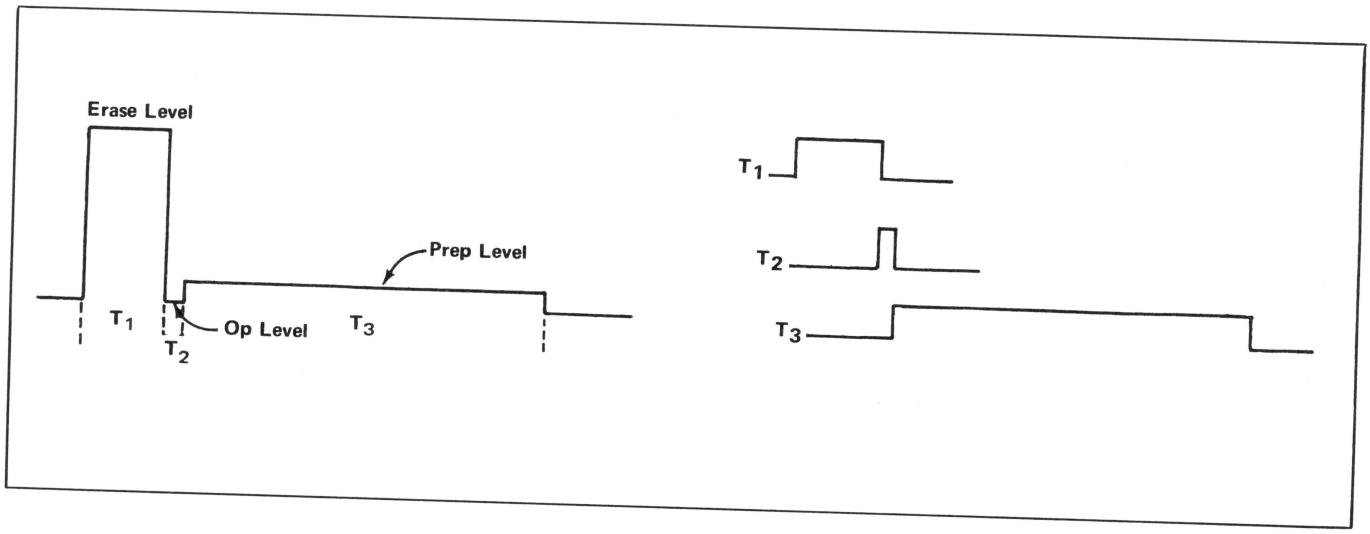

Fig. 3-41. Erase cycle out of Storage Target Backplate.

MAINTENANCE

This section of the manual contains maintenance information for use in preventive maintenance, corrective maintenance, or troubleshooting of the 7613.

Panel Removal

WARNING

Dangerous potentials exist at several points throughout this instrument. When the instrument is operated with the covers removed, do not touch exposed connections or components. Some transistors have voltages present on their cases. Disconnect power before cleaning the instrument or replacing parts.

Cabinet Model. The side panels of the 7613 are held in place by spring-action of the panels themselves. To remove the panels, push the panel toward the top of the instrument until the bottom of the panel is clear of the slot along the bottom rail of the instrument. Then, pull the panel out at the bottom and lift away from the instrument. The bottom panel is held in place with eight screws. The panels protect this instrument from dust in the interior, and also provide protection to personnel from the operating potentials present. They also reduce the EMI radiation from this instrument or EMI interference to the display due to other equipment.

Rack Model. The top cover is held in place with six screws. To remove the cover, the screws need only be loosened slightly to slide the cover out of the slots.

A panel on the left side of the instrument, held in place with six screws, allows access to the vertical amplifier circuit board.

A cover on the rear of the instrument, held in place with four screws, allows access to the power supply regulating transistors. It also allows access to three of the five screws holding the regulating circuit board assembly in the instrument.

Power-Unit Removal

The power unit can be slid out of the back of the 7613 to gain access to the Logic and Rectifier circuit boards and for power-unit maintenance. The power unit can be left connected to the rest of the instrument so that it can be operated in this position for troubleshooting. To remove the power unit, use the following procedure:

1. Remove the side panels (top panel for R7613).

2. Remove the six screws which secure the power unit to the sides of the instrument (see Fig. 4-1 for locations of screws on R7613).

3. Slide the power unit out of the rear of the instrument until it can be set down on the work surface (guide the interconnecting cables so they do not catch on other parts of the instrument).

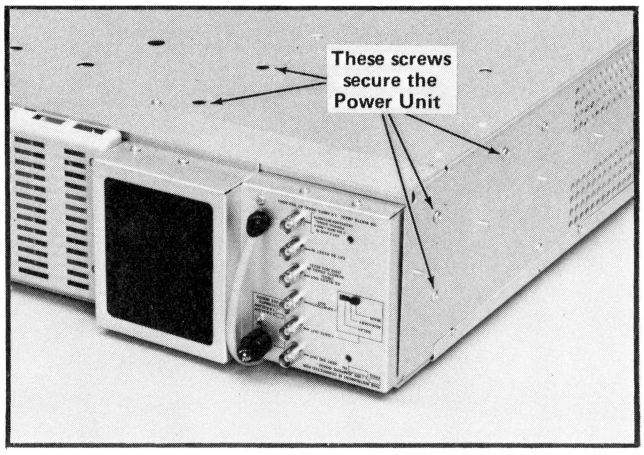

Fig. 4-1. Power unit removal for the R7613.

PREVENTIVE MAINTENANCE

General

Preventive maintenance consists of cleaning, visual inspection, lubrication, etc. Preventive maintenance performed on a regular basis may prevent instrument breakdown and will improve the reliability of this instrument. The severity of the environment to which the 7613 is subjected determines the frequency of maintenance. A convenient time to perform preventive maintenance is preceding recalibration of the instrument.

Cleaning

The 7613 should be cleaned as often as operating conditions require. Accumulation of dirt in the instrument can cause overheating and component breakdown. Dirt on components acts as an insulating blanket and prevents efficient heat dissipation. It also provides an electrical conduction path which may result in instrument failure. The side panels provide protection against dust in the interior of the instrument. Operation without the panels in place necessitates more frequent cleaning.

CAUTION

Avoid the use of chemical cleaning agents which might damage the plastics used in this instrument. Avoid chemicals which contain benzene, toluene, xylene, acetone, or similar solvents.

Exterior. Loose dust accumulated on the outside of the 7613 can be removed with a soft cloth or small brush. The brush is particularly useful for dislodging dirt on and around the front-panel controls. Dirt which remains can be removed with a soft cloth dampened in a mild detergent and water solution. Abrasive cleaners should not be used.

CRT. Clean the plastic light filter, faceplate protector, and the CRT face with a soft, lint-free cloth dampened with denatured alcohol.

The optional CRT mesh filter can be cleaned in the following manner:

1. Hold the mesh filter in a vertical position and brush lightly with a soft No. 7 water-color brush to remove light coatings of dust or lint.

2. Greasy residues or dried-on dirt can be removed with a solution of warm water and a neutral-pH liquid detergent. Use the brush to lightly scrub the filter.

3. Rinse the filter thoroughly in clean water and allow to air dry.

4. If any lint or dirt remains, use clean low-pressure air to remove it. Do not use tweezers or other hard cleaning tools on the filter, as the special finish may be damaged.

5. When not in use, store the mesh filter in a lint-free, dust-proof container such as a plastic bag.

Interior. Dust in the interior of this instrument should be removed occasionally due to its electrical conductivity under high-humidity conditions. The best way to clean the interior is to blow off the accumulated dust with dry, low-pressure air. Remove any dirt which remains with a soft brush or a cloth dampened with a mild detergent and water solution. A cotton-tipped applicator is useful for cleaning in narrow spaces or for cleaning ceramic terminal strips and circuit boards.

The high-voltage circuits, particularly parts located in the high-voltage compartment and the area surrounding the post-deflection anode lead, should receive special attention. Excessive dirt in these areas may cause high-voltage arcing and result in improper instrument operation.

Air Filter (For Rackmount Versions only). The air filter should be visually checked every few weeks and cleaned or replaced if dirty. More frequent inspections are required under severe operating conditions. If the filter is to be replaced, order new filters from your local Tektronix Field Office or representative; order by Tektronix Part No. 378-0041-01. The following procedure is suggested for cleaning the filter.

1. Remove the filter by pulling it out of the retaining frame on the rear panel. Be careful not to drop any of the accumulated dirt into the instrument.

2. Flush the loose dirt from the filter with a stream of hot water.

3. Place the filter in a solution of mild detergent and hot water and let soak for several minutes.

4. Squeeze the filter to wash out any dirt which remains.

5. Rinse the filter in clean water and let dry.

6. Coat the dry filter with an air-filter coating (available from air conditioner suppliers or order Tektronix Part No. 006-0580-00).

7. Let the filter thoroughly dry.

8. Re-install the filter in the retaining frame.

Lubrication

The reliability of potentiometers, switches, and other moving parts can be maintained if they are kept properly lubricated. However, over-lubrication is as detrimental as too little lubrication. A lubrication kit containing necessary lubricants and instructions is available from Tektronix, Inc. Order Part No. 003-0342-01.

Visual Inspection

The 7613 should be inspected occasionally for such defects as broken connections, improperly seated semiconductors, damaged or improperly installed circuit boards, and heat-damaged parts. The corrective procedure for most visible defects is obvious; however, particular care must be taken if heat-damaged components are found. Overheating usually indicates other trouble in the instrument; therefore, it is important that the cause of overheating be corrected to prevent recurrence of the damage.

Semiconductor Checks

Periodic checks of the semiconductors in the 7613 are not recommended. The best check of semiconductor performance is actual operation in the instrument. More details on checking semiconductor operation are given under troubleshooting.

Recalibration

To assure accurate measurements, check the calibration of this instrument after each 1000 hours of operation or every six months if used infrequently. In addition, replacement of components may necessitate recalibration of the affected circuits. The calibration procedure can also be helpful in localizing certain troubles in the instrument. In some cases, minor troubles may be revealed and/or corrected by recalibration.

TROUBLESHOOTING

Introduction

The following information is provided to facilitate troubleshooting of the 7613. Information contained in other sections of this manual should be used along with the following information to aid in locating the defective component. An understanding of the circuit operation is very helpful in locating troubles, particularly where integrated circuits are used. See the Circuit Description section for complete information.

Troubleshooting Aids

Diagrams. Complete circuit diagrams are given on fold-out pages in the Diagrams section. The component number and electrical value of each component in this instrument are shown on these diagrams. Each main circuit is assigned a series of component numbers. Table 4-1 lists the main circuits in the 7613 and the series of component numbers assigned to each. Important voltages and waveforms are also shown on the diagrams. The portions of the circuit mounted on circuit boards are enclosed with blue lines.

Circuit Boards. Fig. 4-2 shows the location of the circuit boards within the 7613; Fig. 4-3 shows the location of circuit boards in the R7613. Pictures of these circuit boards are shown in Figs. 6-1 through 6-11. These pictures are located in the Diagrams section on the back of the page opposite the circuit diagram, to aid the cross-referencing between the diagrams and the circuit-board components. Each electrical component on the boards is identified by its circuit number. The color and location of the interconnecting connectors are also shown. The circuit boards are also outlined on the diagrams with a blue line to show which portions of the circuit are located on a circuit board.

TABLE 4-1

Component Numbers

Component numbers on diagrams	Diagram numbers	Circuit
1-49	1	Main Interface
50-199	2	Logic Circuit
300-399	3	Trigger Selector
200-299	3	Vertical Interface
400-499	4	Vertical Amplifier
500-599	5	Horizontal Amplifier
600-699	6	Output Signals
1000-1099	7	Calibrator and Front Panel
1100-1299	8	CRT Circuit and High Voltage
800-999	9	Low Voltage Power Supply
1300-1499	10	Storage Circuit
2100-2299	11	Readout System

Multi-Pin Connector Color-Code. The multi-pin connectors used for interconnection between circuit boards are color-coded to aid in circuit tracing. The color of the connector body matches the resistor color-code for the last digit of the circuit number; e.g., P601 is brown, P603 is orange, etc.

Wiring Color-Code. All insulated wire and cable used in the 7613 is color-coded to facilitate circuit tracing.

Power Cord Conductor Identification

Conductor	Color	Alternate Color
Ungrounded (Line)	Brown	Black
Grounded (Neutral)	Blue	White
Grounding (Earthing)	Green-Yellow	Green-Yellow

Resistor Color-Code. In addition to the brown composition resistors, some metal-film resistors and some wire-wound resistors are used in the 7613. The resistance values of wire-wound resistors are usually printed on the body of the component. The resistance values of composition resistors and metal-film resistors are color-coded on the components with EIA color-code (some metal-film resistors may have the value printed on the body). The color-code is read starting with the stripe nearest the end of the resistor. Composition resistors have four stripes which consist of two significant figures, a multiplier, and a tolerance value (see Fig. 4-2). Metal-film resistors have five stripes consisting of three significant figures, a multiplier, and a tolerance value.

Capacitor Marking. The capacitance values of common disc capacitors and small electrolytics are marked on the side of the component body. The white ceramic capacitors used in the 7613 are color-coded in picofarads using a modified EIA code (see Fig. 4-4).

Diode Color-Code. The cathode end of each glass-encased diode is indicated by a stripe, a series of stripes, or a dot. For most silicon or germanium diodes with a series of stripes, the color-code identifies the three significant digits of the TEKTRONIX Part Number using the resistor color-code system (e.g., a diode color-coded pink- or blue-, brown-gray-green indicates TEKTRONIX Part No. 152-0185-00). The cathode and anode ends of metal-encased diodes can be identified by the diode symbol marked on the body.

Semiconductor Lead Configuration. Fig. 4-5 shows the lead configuration for the semiconductors used in this instrument. This view is as seen from the bottom of the semiconductors.

Troubleshooting Equipment

The following equipment is useful for troubleshooting the 7613.

1. Transistor Tester

Description: TEKTRONIX Type 576 Transistor-Curve Tracer or equivalent.

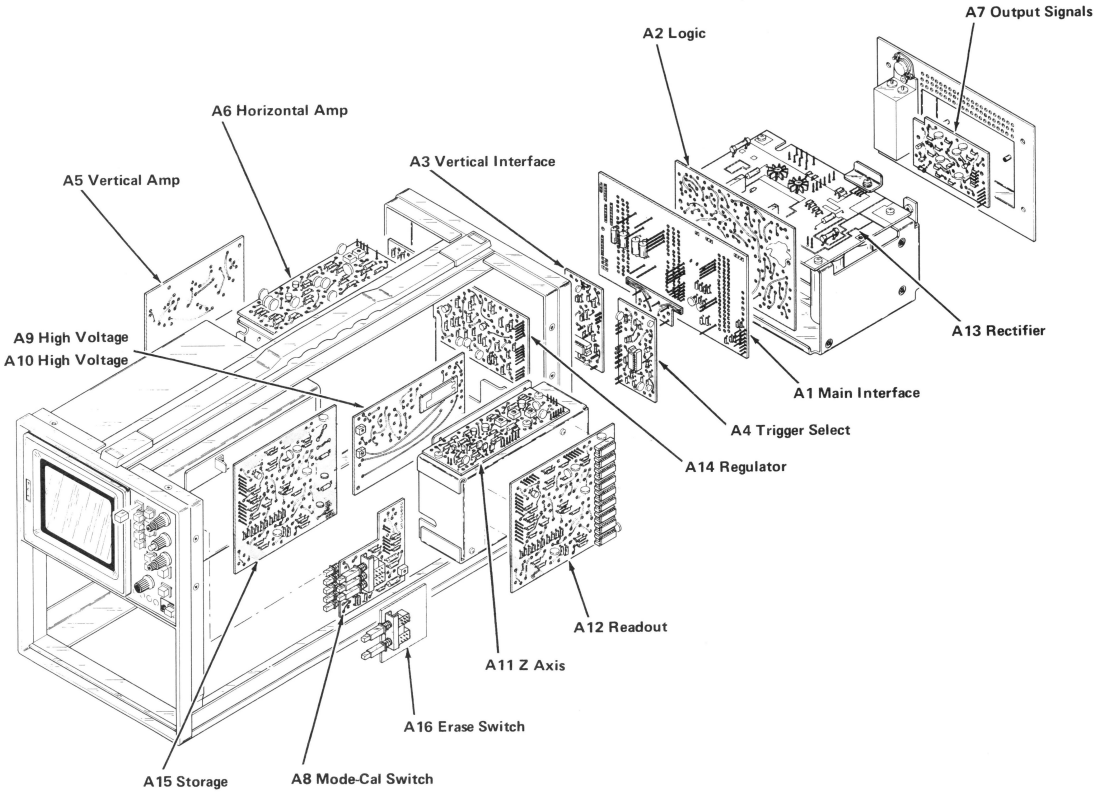

Fig. 4-2. Location of circuit boards in the 7613.

1463-40

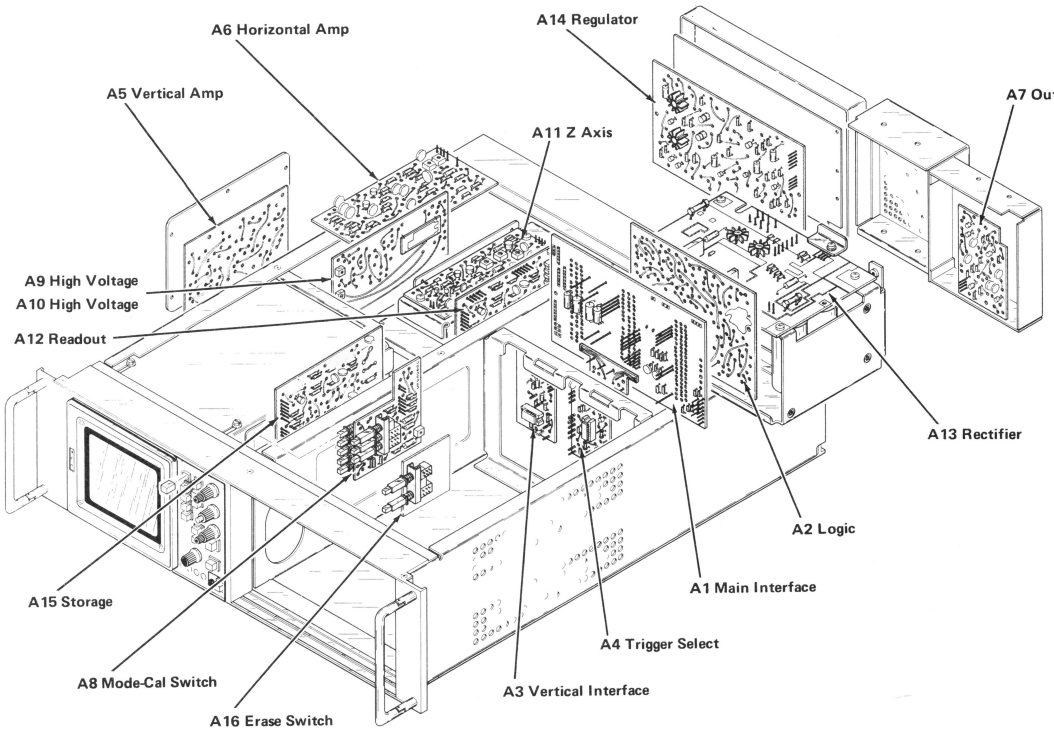

Fig. 4-3. Location of circuit boards in the R7613.

1463-41

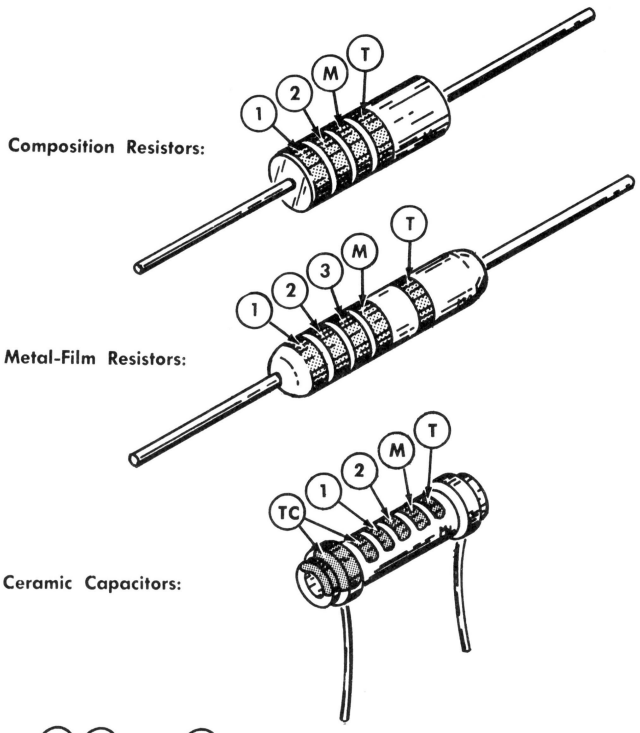

Resistor and Capacitor Color Code

Color	Significant Figures	Multiplier: Resistors	Multiplier: Capacitors	Tolerance: Resistors	Tolerance: Capacitors
Silver	---	10^{-2}	---	±10%	---
Gold	---	10^{-1}	---	±5%	---
Black	0	1	1	---	±20% or 2 pF*
Brown	1	10	10	±1%	±1% or 0.1 pF*
Red	2	10^{2}	10^{2}	±2%	±2%
Orange	3	10^{3}	10^{3}	±3%	±3%
Yellow	4	10^{4}	10^{4}	±4%	+100% −0%
Green	5	10^{5}	10^{5}	±0.5%	±5% or 0.5 pF*
Blue	6	10^{6}	10^{6}	---	---
Violet	7	---	---	---	---
Gray	8	---	10^{-2}	---	+80% −20% or 0.25 pF*
White	9	---	10^{-1}	---	±10% or 1 pF*
(none)	---	---	---	±20%	±10% or 1 pF*

*For capacitance of 10 pF or less.

(1) (2) and (3) —1st, 2nd and 3rd significant figures;
(M) —multiplier; (T) —tolerance;
(TC) —temperature coefficient.

NOTE: (T) and/or (TC) color code for capacitors depends upon manufacturer and capacitor type. May not be present in some cases.

Fig. 4-4. Color code for resistors and ceramic capacitors.

Purpose: To test the semiconductors used in this instrument.

2. Multimeters

Description: Digital voltmeter, 10 megohm input impedance and 0 to 500 volts range; ohmmeter, 0 to 2 megohms. Accuracy, within 1%. Test probes must be insulated to prevent accidental shorting.

Purpose: To check voltages and for general troubleshooting in this instrument.

NOTE

A 20,000 ohms/volt VOM can be used to check the voltages in this instrument if allowances are made for the circuit loading of the VOM at high-impedance points.

3. Test Oscilloscope

Description: Frequency response, DC to 50 megahertz; deflection factor, 50 volts/division. A 10X probe should be used to reduce circuit loading.

Purpose: To check operating waveforms in this instrument.

Troubleshooting Techniques

This troubleshooting procedure is arranged in an order which checks the simple trouble possibilities before proceeding with extensive troubleshooting. The first few checks assure proper connection, operation, and calibration. If the trouble is not located by these checks, the remaining steps aid in locating the defective component. When the defective component is located, it should be replaced following the replacement procedures given under corrective maintenance.

1. Check Control Settings. Incorrect control settings can indicate a trouble that does not exist. If there is any question about the correct function or operation of any control, see the Operating Instructions section.

2. Check Associated Equipment. Before proceeding with troubleshooting of the 7613, check that the equipment used with this instrument is operating correctly.

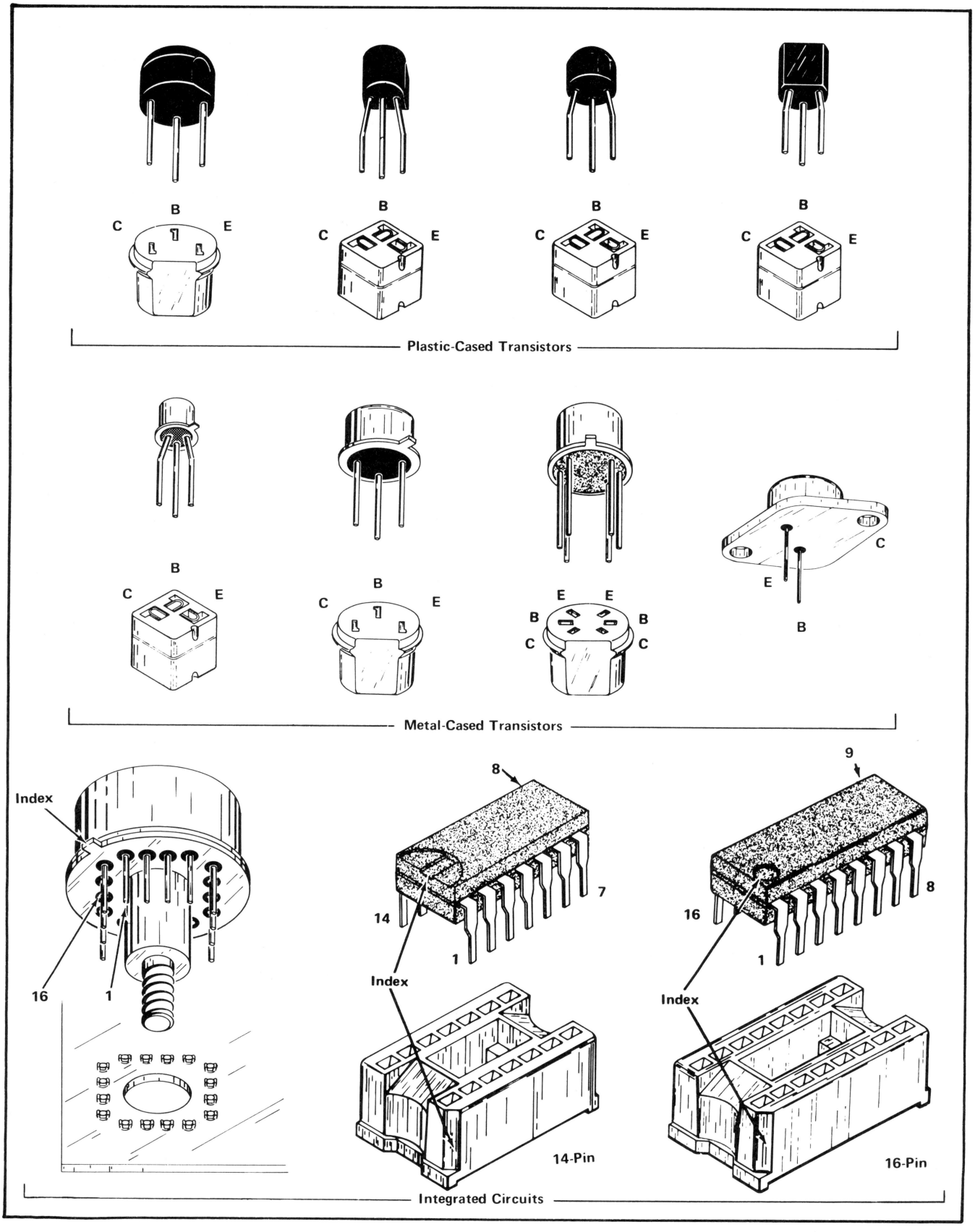

Fig. 4-5. Electrode configuration for semiconductors used in this instrument.

Check that the signal is properly connected and that the interconnecting cables are not defective. Also, check the power source. The associated plug-in units can be checked for proper operation by substituting other units which are known to be operating properly (preferably of the same types). If the trouble persists after substitution, the 7613 is probably at fault.

3. Visual Check. Visually check the portion of the instrument in which the trouble is located. Many troubles can be located by visual indications such as unsoldered connections, broken wires, damaged circuit boards, damaged components, etc.

4. Check Instrument Calibration. Check the calibration of this instrument, or the affected circuit if the trouble appears in one circuit. The apparent trouble may only be a result of misadjustment, or may be corrected by calibration. Complete calibration instructions are given in the Calibration section.

5. Isolate Trouble To a Circuit. To isolate trouble to a particular circuit, note the trouble symptom. The symptom often identifies the circuit in which the trouble is located. For example, poor focus indicates that the CRT circuit (includes high-voltage supplies) is probably at fault. When trouble symptoms appear in more than one circuit, check affected circuits by taking voltage and waveform readings. Typical voltages and waveforms are given on the schematics in the Diagrams section.

Incorrect operation of all circuits often indicates trouble in the power supply. Check first for correct voltage of the individual supplies. A defective component elsewhere in the instrument can appear as a power-supply trouble and may also affect the operation of other circuits. Table 4-2 lists the tolerances of the power supplies in this instrument. These voltages are measured between the power-supply test points (see Section 2 for test-point location) and ground. If a power-supply voltage is within the listed tolerance, the supply can be assumed to be working correctly. If outside the tolerance, the supply may be misadjusted or operating incorrectly. Use the procedure given in the Calibration section to adjust the power supplies.

Fig. 4-6 provides a guide for locating a defective circuit. This chart does not include checks for all possible defects; use steps 6 and 7 in such cases. Start from the top of the chart and perform the given checks on the left side of the page until a step is found which does not produce the indicated results. Further checks and/or the circuit in which the trouble is probably located are listed to the right of this step.

TABLE 4-2

Power Supply Tolerance and Ripple

Power Supply	Test Point	Output Voltage Tolerance	Maximum ripple (peak-to-peak)
−50 Volt	TP−50 (back of Main Interface board) on P1170-Pin 1	±0.1 volt	5 mV
−15 Volt	P1170-Pin 8	±0.3 volt	2 mV
+5 Volt	P1170-Pin 6	±0.15 volt	2 mV
+15 Volt	P1170-Pin 5	±0.3 volt	2 mV
+50 Volt	P1170-Pin 4	±0.6 volt	5 mV
+130 Volt	P1170-Pin 3	±5.2 volts	300 mV

If incorrect operation of the power supplies is suspected, connect the 7613 to a variable autotransformer. Then, check for correct regulation with a DC voltmeter (0.1% accuracy) and correct ripple with a test oscilloscope while varying the autotransformer throughout the regulating range of this instrument.

After the defective circuit has been located, proceed with steps 6 and 7 to locate the defective component(s).

6. Check Voltages and Waveforms. Often the defective component can be located by checking for the correct voltage or waveform in the circuit. Typical voltages and waveforms are given on the diagrams.

NOTE

Voltages and waveforms given on the diagrams are not absolute and may vary slightly between instruments. To obtain operating conditions similar to those used to take these readings, see the first diagram page.

7. Check Individual Components. The following procedures describe methods of checking individual components in the 7613. Components which are soldered in place are best checked by first disconnecting one end. This isolates the measurement from the effects of surrounding circuitry.

A. SEMICONDUCTORS.

CAUTION

Power switch must be turned off before removing or replacing semiconductors.

CIRCUIT ISOLATION TROUBLESHOOTING CHART

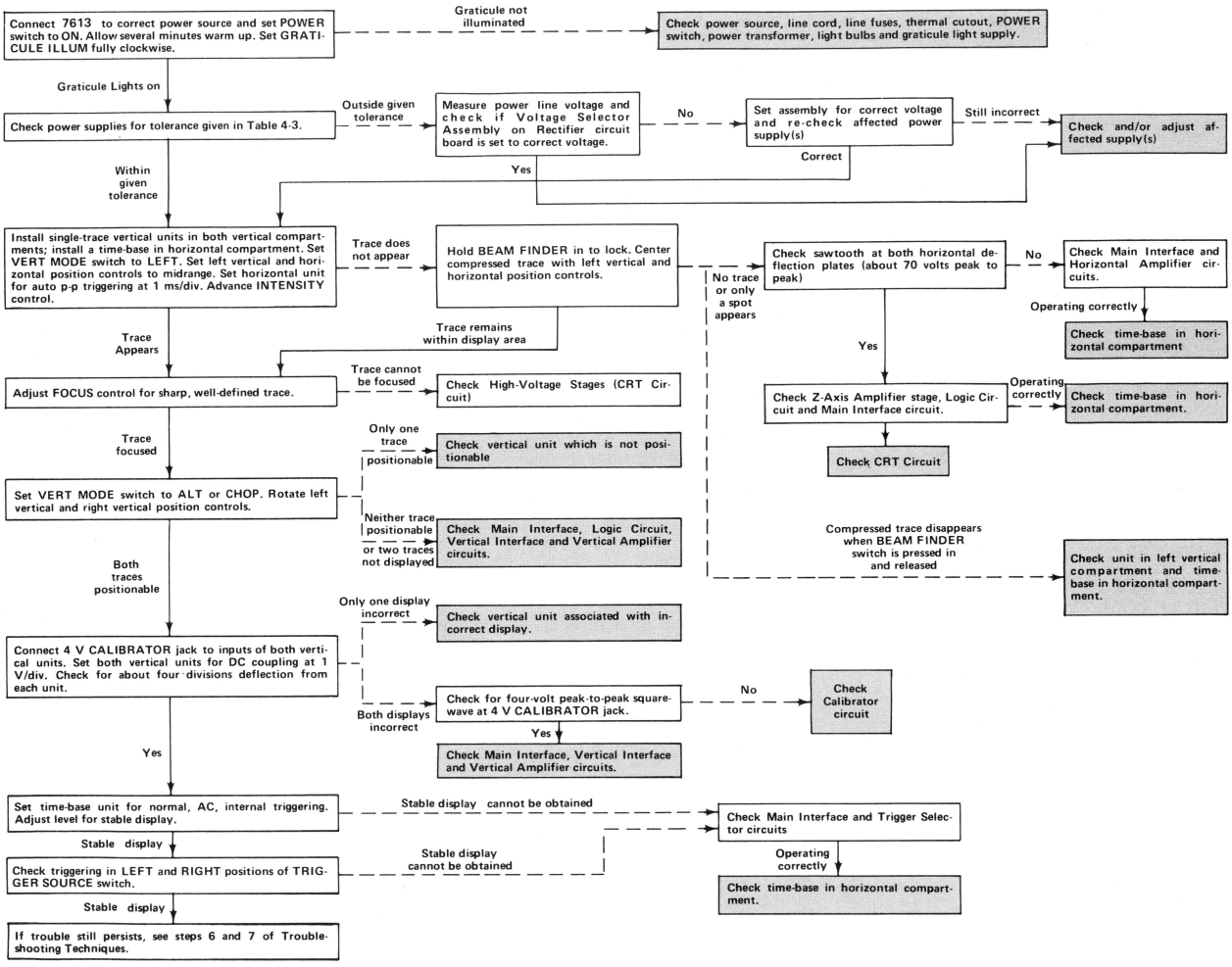

Fig. 4-6.

A good check of transistor operation is actual performance under operating conditions. A transistor can most effectively be checked by substituting a new component for it (or one which has been checked previously). However, be sure that circuit conditions are not such that a replacement transistor might also be damaged. If substitute transistors are not available, use a dynamic tester. Static-type testers are not recommended, since they do not check operation under simulated operating conditions.

Integrated circuits can be checked with a voltmeter, test oscilloscope, or by direct substitution. A good understanding of the circuit operation is essential to trouble-shooting circuits using integrated circuits. In addition, operating waveforms, logic levels, and other operating information for the integrated circuits are given in the Circuit Description section. Use care when checking voltages and waveforms around the integrated circuits so adjacent leads are not shorted together. A convenient means of clipping a test probe to the 14- and 16-pin integrated circuits is with an integrated-circuit test clip. This device also doubles as an integrated-circuit extraction tool.

B. DIODES.

A diode can be checked for an open or for a short circuit by measuring the resistance between terminals with an ohmmeter set to the R X 1k scale. The diode resistance should be very high in one direction and very low when the meter leads are reversed. Do not check tunnel diodes or back diodes with an ohmmeter.

CAUTION

Do not use an ohmmeter scale that has a high internal current. High currents may damage the diodes under test.

C. RESISTORS.

Check the resistors with the ohmmeter. See the Electrical Parts List for the tolerance of the resistors used in this instrument. Resistors normally do not need to be replaced unless the measured value varies widely from the specified value.

D. INDUCTORS.

Check for open inductors by checking continuity with an ohmmeter. Shorted or partially shorted inductors can usually be found by checking the waveform response when high-frequency signals are passed through the circuit. Partial shorting often reduces high-frequency response (roll-off).

E. CAPACITORS.

A leaky or shorted capacitor can best be detected by checking resistance with an ohmmeter on the highest scale. Do not exceed the voltage rating of the capacitor. The resistance reading should be high after initial charge of the capacitor. An open capacitor can best be detected with a capacitance meter or by checking if the capacitor passes AC signals.

8. Repair and Readjust the Circuit. If any defective parts are located, follow the replacement procedures given in this section. Be sure to check the performance of any circuit that has been repaired or that has had any electrical components replaced.

CORRECTIVE MAINTENANCE

General

Corrective maintenance consists of component replacement and instrument repair. Special techniques required to replace components in this instrument are given here.

Obtaining Replacement Parts

Standard Parts. All electrical and mechanical part replacements for the 7613 can be obtained through your local TEKTRONIX Field Office or representative. However, many of the standard electronic components can be obtained locally in less time than is required to order them from Tektronix, Inc. Before purchasing or ordering replacement parts, check the parts list for value, tolerance, rating, and description.

NOTE

When selecting replacement parts, it is important to remember that the physical size and shape of a component may affect its performance in the instrument, particularly at high frequencies. All replacement parts should be direct replacements unless it is known that a different component will not adversely affect instrument performance.

Special Parts. In addition to the standard electronic components, some special components are used in the 7613. These components are manufactured or selected by Tektronix, Inc. to meet specific performance requirements, or are manufactured for Tektronix, Inc. in accordance with our specifications. Most of the mechanical parts used in this instrument have been manufactured by Tektronix, Inc. Order all special parts directly from your local TEKTRONIX Field Office or representative.

Ordering Parts. When ordering replacement parts from Tektronix, Inc., include the following information:

1. Instrument type.

2. Instrument serial number.

3. A description of the part (if electrical, include circuit number).

4. TEKTRONIX part number.

Soldering Techniques

WARNING

Disconnect the instrument from the power source before soldering.

The reliability and accuracy of this instrument can be maintained only if proper soldering techniques are used when repairing or replacing parts. General soldering techniques which apply to maintenance of any precision electronic equipment should be used when working on this instrument. Use only 60/40 rosin-core electronic-grade solder. The choice of soldering iron is determined by the repair to be made. When soldering on circuit boards, use a 35- to 40-watt pencil-type soldering iron with a 1/8-inch wide, wedge-shaped tip. Keep the tip properly tinned for best heat transfer to the solder joint. A higher wattage soldering iron may separate the wiring from the base material. Avoid excessive heat; apply only enough heat to remove the component or to make a good solder joint. Also, apply only enough solder to make a firm solder joint; do not apply too much solder.

For metal terminals (e.g., switch terminals, potentiometers, etc.) a higher wattage-rating soldering iron may be required. Match the soldering iron to the work being done. For example, if the component is connected to the chassis or other large heat-radiating surface, it will require a 75-watt or larger soldering iron. The pencil-type soldering iron used on the circuit board can be used for soldering to switch terminals, potentiometers, or metal terminals mounted in plastic holders.

After soldering is completed, clean the area around the solder connection with a flux-remover solvent. Be careful not to remove any information printed in the area.

Component Replacement

WARNING

Disconnect the instrument from the power source before replacing components.

General. The exploded-view drawings associated with the Mechanical Parts List (located at rear of manual) may be helpful in the removal or disassembly of individual components or sub-assemblies.

Circuit Board Replacement. If a circuit board is damaged beyond repair, the entire assembly including all soldered-on components, can be replaced. Part numbers are given in the Mechanical Parts List.

NOTE

Even though unwired boards are available without components, use of the completely wired replacement board is recommended due to the large number of components mounted on most of the boards.

Most of the circuit boards in this instrument are mounted on the chassis; pin connectors are used for interconnection with other circuits. Use the following procedure to remove the chassis-mounted circuit boards (removal instructions for the exceptions will be given later).

A. CHASSIS-MOUNTED BOARDS.

1. Disconnect any pin connectors on the board or connected to other portions of the instrument. Note the order of these connectors so they can be correctly replaced.

2. Remove the securing screws.

3. Remove the board.

4. To replace the board, reverse the order of removal. Match the arrows on the multi-pin connectors to the arrows on the board. Correct location of the pin connectors is shown in the circuit board illustrations in the Diagrams section.

B. TRIGGER SELECTOR AND VERTICAL INTERFACE CIRCUIT BOARD REPLACEMENT.

The Trigger Selector and Vertical Interface circuit boards plug onto the front of the Main Interface circuit board. Use the following procedure to replace either board.

1. Remove the securing screws.

2. Pull out on the edges of the board until the board clears the interconnecting terminals. Hold the board parallel to the Main Interface board until the board is free, so as not to bend the interconnecting terminals.

3. To replace the circuit board, position it so the interconnecting pins and sockets mate properly.

4. Gently press the circuit board against the mounting surface. Be sure that all the interconnecting pins and sockets mate properly.

5. Replace the securing screws.

C. LOGIC CIRCUIT BOARD REPLACEMENT.

1. Slide out the power unit as described previously.

2. Disengage the plastic snaps which secure the sides of the board.

3. Pull out on the edges of the board until the board clears the interconnecting terminals. Hold the board parallel to the Main Interface board until the board is free, so as not to bend the interconnecting terminals.

4. To replace the Logic board, position it so the guide holes in the board mate with the guide posts. Check that all the interconnecting pins and sockets mate properly.

5. Gently press the board against the Main Interface board until the plastic snaps secure the board.

D. MAIN INTERFACE CIRCUIT BOARD REPLACEMENT.

1. Slide out the power unit as described previously.

2. Remove all of the plug-on circuit boards from the Main Interface board (remove plug-in units to gain access to plug-on boards on front of Main Interface board).

3. Disconnect the multi-pin connectors from the rear of the Main Interface board. Note the order of these connectors so they can be correctly replaced.

4. Remove the three screws from inside each plug-in compartment which hold the plug-in interface connectors to the chassis (total of nine screws). Also remove the hexagonal posts which secure the ground straps to the Main Interface board.

5. Remove the Main Interface board assembly through the rear of the instrument.

6. To replace the Main Interface board, reverse the order of removal. Match the arrows on the multi-pin connectors to the arrows on the board. Correct location of the pin connectors is shown in the circuit board illustration in the Diagrams section.

E. LOW-VOLTAGE REGULATOR CIRCUIT BOARD REPLACEMENT.

1. Remove the four screws which secure the regulator dust cover to the Low-Voltage Regulator sub-assembly.

2. Remove the four screws holding the Low-Voltage Regulator sub-assembly to the main chassis see Fig. 4-7).

3. Pull the sub-assembly out through the rear of the instrument and disconnect the cables from the multi-pin connectors.

4. Remove the two screws holding the fan motor to the bracket; be careful not to lose the spacers between the motor and bracket. Remove the four screws holding the air baffle.

5. Remove the power transistors from the back of the sub-assembly. Note the location of each power transistor for replacement to the same location.

6. To replace the Low-Voltage Regulator Board, reverse the order of removal.

NOTE

After replacing the power transistors, check that the transistor cases are not shorted to the heat radiator before applying power.

F. RECTIFIER BOARD REPLACEMENT.

To replace the Rectifier board, proceed as follows:

1. Slide out the power unit as described previously.

2. Disconnect the pin connectors from the board.

3. Disconnect the wires soldered to the top of the board.

4. Unsolder all of the power transformer wires connected to the top of the board. Use a vacuum-type desoldering tool to remove the solder from the hole in the circuit board.

5. Remove the screws holding each corner of the board to the chassis.

6. To replace the Rectifier board, reverse the order of removal. Be sure that all of the transformer wires are properly placed before resoldering. Match the arrows on the multi-pin connectors to the arrows on the board. Correct location of the pin connectors and the wire color code is shown on the circuit board illustration in the Diagrams section.

G. CALIBRATOR BOARD REPLACEMENT.

1. Unsolder power on/off indicator.

2. Remove FOCUS, INTENSITY, BEAM FINDER and GRATICULE ILLUM knobs.

3. Remove securing nut which holds INTENSITY and GRATICULE ILLUM control to front panel.

4. Disengage the power switch actuating rod from the coupler. Remove the rod and plastic bushing through the front of the instrument.

5. Remove two screws holding the VERT MODE switch to the front sub-panel.

6. Remove the screw holding the calibrator board to the support on the CRT shield.

7. Pull the Calibrator board out far enough to allow the multi-pin connectors and wire leads to be disconnected from the Calibrator board (note the wire color code).

8. Remove the board.

9. To replace the circuit board, reverse the removal procedure. Match the arrows on the multi-pin connectors to the arrows on the circuit board.

Plug-In Interface Connectors. The individual contacts of the plug-in interface connectors can be replaced. However, it is recommended that the entire Main Interface board be replaced if a large number of the contacts are damaged. An alternative solution is to refer the maintenance of the damaged Main Interface board to your local TEKTRONIX Field Office or representative. Use the following procedure to replace an individual contact of the plug-in interface connector.

1. Remove the Main Interface circuit board from the instrument as described previously.

2. Snap the connector cover (white plastic) off the side of the plug-in interface connector which needs repair.

3. Unsolder and remove the damaged contact.

4. Install the replacement contact. Carefully form it to the required shape to fit against the connector body.

5. Snap the connector cover back onto the plug-in interface connector. Check that the contact which was replaced is aligned with the other contacts.

6. Replace the Main Interface board.

Access To The Fan Motor

1. Remove the four screws holding the Low-Voltage Regulator sub-assembly to the main chassis (see Fig. 4-7).

2. Pull the Low-Voltage regulator sub-assembly out through the rear of the instrument as far as cables will permit.

3. Remove the two screws holding the motor to the bracket; be careful not to lose the spacers between the motor and the bracket.

4. To replace the motor, reverse the order of removal.

Access To The Fan Motor For The R7613

1. Remove the eight screws holding the Signals-Out rear panel to the chassis. Pull rear panel out as far as cables will permit (see Fig. 4-8).

2. Remove the four corner bolts securing the motor to the chassis.

3. To replace the motor, reverse the order of removal.

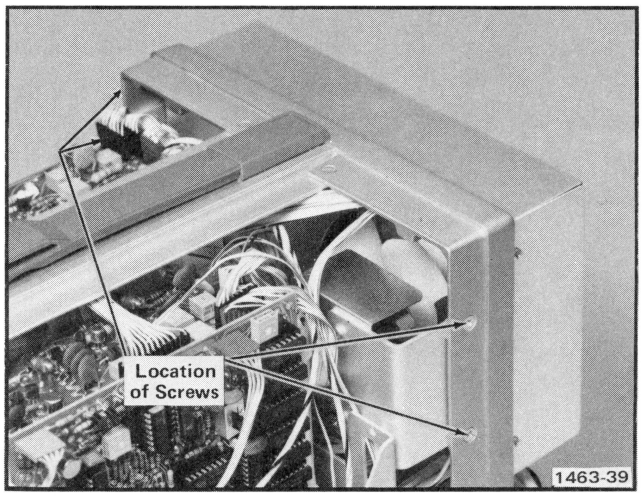

Fig. 4-7. Location of screws holding Low Voltage sub-chassis.

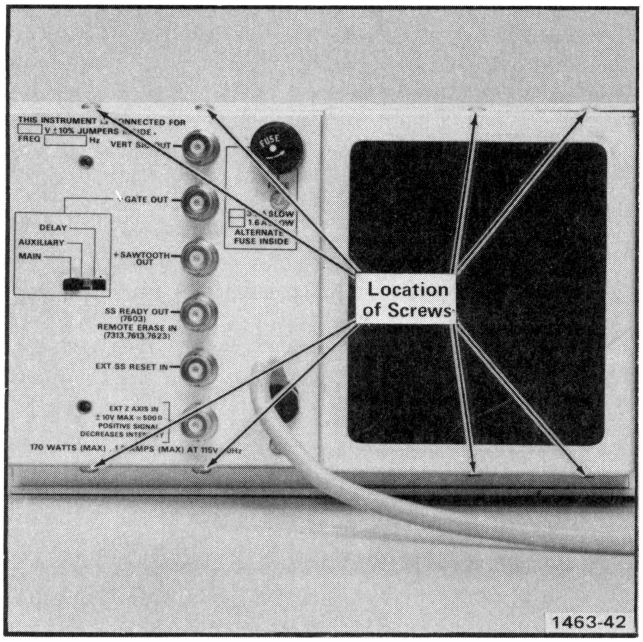

Fig. 4-8. Location of screws holding Signals Out rear panel.

Semiconductor Replacement. Semiconductors should not be replaced unless actually defective. If removed from their sockets during routine maintenance, return them to their original sockets. Unnecessary replacement of semiconductors may affect the calibration of this instrument. When semiconductors are replaced, check the operation of the part of the instrument which may be affected.

CAUTION

POWER switch must be turned off before removing or replacing semiconductors.

Replacement semiconductors should be of the original type or a direct replacement. Fig. 4-5 shows the lead configuration of the semiconductors used in this instrument. Some plastic case transistors have lead configurations which do not agree with those shown here. If a replacement transistor is made by a different manufacturer than the original, check the manufacturer's basing diagram for correct basing. All transistor sockets in this instrument are wired for the standard basing as used for metal-cased transistors. Transistors which have heat radiators or are mounted on the chassis use silicone grease to increase heat transfer. Replace the silicone grease when replacing these transistors.

WARNING

Handle silicone grease with care. Avoid getting silicone grease in the eyes. Wash hands thoroughly after use.

An extracting tool should be used to remove the 14- and 16-pin integrated circuits to prevent damage to the pins. This tool is available from Tektronix, Inc. Order TEKTRONIX Part No. 003-0619-00. If an extracting tool is not available when removing one of these integrated circuits, pull slowly and evenly on both ends of the device. Try to avoid having one end of the integrated circuit disengage from the socket before the other, as this may damage the pins.

Access to Power Transistors. The power transistors associated with the Low-Voltage Power Supply are mounted on the heat radiator at the rear of the instrument. To gain access to these transistors, remove the screws which secure the plastic protective cover to the heat radiator. The transistors are mounted in sockets so they can be removed from the rear by taking out the two screws in the mounting tabs (cases elevated above chassis; be sure power is off). To replace the sockets, refer to the procedure for removal of the Low-Voltage Regulator circuit board.

NOTE

After replacing a power transistor, check that the collector is not shorted to ground before applying power.

Interconnecting Pin Replacement. Interconnecting pins are used to interconnect many of the circuit boards in the 7613. Two types of mating connectors are used for these interconnecting pins. If the mating connector is mounted on a plug-on circuit board, a special socket is soldered into the board. If the mating connector is on the end of a lead, an end-lead pin connector is used which mates with the interconnecting pin. The following information provides the replacement procedure for the various types of interconnecting methods.

A. CIRCUIT-BOARD PINS.

NOTE

A circuit-board pin replacement kit including necessary tools, instructions and replacement pins is available from Tektronix, Inc. Order TEKTRONIX Part No. 040-0542-00.

To replace a pin which is mounted on a circuit board, first disconnect the pin connectors. Then, unsolder the damaged pin and pull it out of the circuit board with a pair of pliers. Be careful not to damage the wiring on the board with too much heat. Ream out the hole in the circuit board with a 0.031-inch drill. Remove the ferrule from the new interconnecting pin and press the new pin into the hole in the circuit board. Position the pin in the same manner as the old pin. Then, solder the pin on both sides of the circuit board. If the old pin was bent at an angle to mate with a connector, bend the new pin to match the associated pins.

B. CIRCUIT-BOARD PIN SOCKETS.

The pin sockets on the circuit boards are soldered to the rear of the board. To replace one of these sockets, first unsolder the pin (use a vacuum-type desoldering tool to remove excess solder). Then straighten the tabs on the socket and remove it from the hole in the circuit board. Place the new socket in the circuit board hole and press the tabs down against the board. Solder the tabs of the socket to the circuit board; be careful not to get solder into the socket.

NOTE

The spring tension of the pin sockets ensures a good connection between the circuit board and the pin. This spring tension can be destroyed by using the pin sockets as a connecting point for spring-loaded probe tips, alligator clips, etc.

C. END-LEAD PIN CONNECTORS.

The pin connectors used to connect the wires to the interconnecting pins are clamped to the ends of the associated leads. To replace damaged end-lead pin connectors, remove the old pin connector from the end of the lead and clamp the replacement connector to the lead.

Some of the pin connectors are grouped together and mounted in a plastic holder; the overall result is that these connectors are removed and installed as a multi-pin connector. To provide correct orientation of this multi-pin connector when it is replaced, an arrow is stamped on the circuit board and a matching arrow is molded into the plastic housing of the multi-pin connector. Be sure these arrows are aligned as the multi-pin connector is replaced. If the individual end-lead pin connectors are removed from the plastic holder, note the color of the individual wires for replacement.

Cathode-Ray Tube Replacement. To replace the cathode-ray tube, proceed as follows:

A. Removal

1. Remove the four screws holding the Low-Voltage Regulator sub-assembly to the main chassis (see Fig. 4-7). It is not necessary to completely remove the board or disconnect any multi-pin connectors.

2. Remove the CRT base socket from the rear of the CRT.

3. Loosen the two screws located on each side of the CRT socket until the tension of the springs on these screws is released. Then, press in on the screws to be sure that the CRT clamp is loose.

4. Disconnect the deflection-plate connectors. Be careful not to bend these pins.

5. Disconnect the CRT anode plug from the jack coming from the high voltage compartment. Ground this lead to the chassis to dissipate any stored charge.

6. Disconnect P1520 from the multi-pin connector on the storage board.

7. Remove the plastic CRT mask from around the front of the CRT screen by grasping at the bottom of the frame and pulling out.

8. Remove the four screws holding the CRT bezel. This will allow the removal of the CRT light filter, CRT metal mask, CRT bezel, CRT implosion shield, and CRT plastic mask.

WARNING

Use care when handling a CRT. Protective clothing and safety glasses should be worn. Avoid striking it on any object which might cause it to crack or implode. When storing a CRT, place it in a protective carton or set it face down in a protected location on a smooth surface with a soft mat under the faceplate to protect it from scratches.

9. Hold one hand on the CRT faceplate and push forward on the CRT base with the other. As the CRT starts out of the shield, grasp it firmly. Guide the anode lead and multi-pin connector (P1520) through the cutout in the CRT shield as the CRT is removed.

B. Replacement

1. Insert the CRT into the shield. Guide the anode lead and multi-pin connector (P1520) through the hole in the CRT shield.

2. Clean the CRT faceplate, CRT implosion shield, CRT light filter with a soft, lint-free cloth dampened with denatured alcohol.

3. Re-install the CRT plastic mask, CRT implosion shield, CRT bezel, CRT metal mask, and CRT light filter. Tighten the four bezel screws. Replace the plastic CRT mask by pushing in until it snaps into place.

4. Connect P1520 to the multi-pin connector on the storage board.

5. Reconnect the anode plug.

6. Push forward on the CRT base to be certain that the CRT is as far forward as possible. Then tighten the two screws beside the CRT base until the springs on the screws are compressed. It is best to tighten each side a few turns at a time to evenly distribute the tension.

7. Connect the CRT base socket.

8. Re-install the Low-Voltage Regulator sub-assembly.

9. Carefully reconnect the deflection-plate connectors. After each connector is installed, lightly pull in its lead to be sure that it will remain in its socket.

10. Check the calibration of the complete instrument.

Switch Replacement. The pushbutton switches used in the 7613 are not repairable and should be replaced as a unit if defective.

Graticule-Bulb Replacement. To remove a graticule bulb, first remove the two screws securing the CRT bezel to the front panel. Remove the plastic light shield and retaining spring. Now, firmly grasp the defective bulb and pull straight out. Push the replacement bulb straight into the socket as far as it will go. Replace the retaining spring, light shield, and CRT bezel.

Power Transformer Replacement. Replace the power transformer only with a direct replacement transformer. When removing the transformer, tag the leads with the corresponding terminal numbers to aid in connecting the new transformer. After the transformer has been replaced, check the performance of the complete instrument using the procedure given in the Calibration section.

High-Voltage Compartment. The components located in the high-voltage compartment can be reached for maintenance or replacement by using the following procedure. Diagram 6 shows the location of the components in the high-voltage compartment and color-coding of the wires.

NOTE

All solder joints in the high-voltage compartment should have smooth surfaces. Any protrusions may cause high-voltage arcing at high altitudes.

1. Remove the heat radiator/Low-Voltage Regulator assembly as described previously.

2. Disconnect the CRT base socket.

3. Disconnect the CRT anode plug and discharge it to the chassis. Using an insulated probe or wire, discharge the jack portion of the CRT anode connector to chassis ground.

4. Disconnect the multi-pin connectors on the Z-Axis Amplifier board.

5. Remove the screw on the bottom of the high-voltage compartment and the two screws located at the top.

6. Guide the high-voltage compartment away from the instrument chassis. Be careful not to damage any of the components or the pin connectors on the High-Voltage or Z-Axis Amplifier circuit boards. Disconnect the multi-pin connectors on the High-Voltage board.

7. Using an insulated shorting strap, discharge the exposed connections to chassis ground.

8. Remove the two power transistors and the four screws which secure the High-Voltage board to the high-voltage compartment. Now, all of the circuitry in the high-voltage box can be reached for maintenance or replacement except those in the encapsulated assembly.

9. To replace the encapsulated assembly, remove the four screws located on the bottom of the High-Voltage circuit board (remove board to reach screws).

10. To replace the high-voltage compartment, reverse the above procedure. Be careful not to pinch any of the interconnecting wires when re-attaching the high-voltage compartment to the chassis.

Fuse Replacement. Table 4-3 gives the rating, location, and function of the fuses used in this instrument.

TABLE 4-3

Fuse Rating

Circuit Number	Rating	Location	Function
F1000	3.2 A Slow	Rear panel	110-volt line
F1000	1.6 A Slow	Rectifier board	220-volt line
F814	2 A Fast	Rectifier board	High voltage
F855	0.15 A Fast	Low-Voltage Regulator board	+130 volts

Recalibration After Repair

After any electrical component has been replaced, the calibration of that particular circuit should be checked, as well as the calibration of other closely related circuits.

Since the low-voltage supply affects all circuits, calibration of the entire instrument should be checked if work has been done in the low-voltage supply or if the power transformer has been replaced.

Instrument Repackaging

If the Tektronix instrument is to be shipped to a Tektronix Service Center for service or repair, attach a tag showing: owner (with address) and the name of an individual at your firm that can be contacted, complete instrument serial number and a description of the service required.

Save and re-use the package in which your instrument was shipped. If the original packaging is unfit for use or not available, repackage the instrument as follows:

1. Obtain a carton of corrugated cardboard having inside dimensions of no less than six inches more than the instrument dimensions; this will allow for cushioning. Refer to the following table for carton test strength requirements.
2. Surround the instrument with polyethylene sheeting to protect the finish of the instrument.
3. Cushion the instrument on all sides by tightly packing dunnage or urethane foam between carton and instrument, allowing three inches on all sides.
4. Seal carton with shipping tape or industrial stapler.

SHIPPING CARTON TEST STRENGTH

Gross Weight (lb)	Carton Test Strength (lb)
0-10	200
10-30	275
30-120	375
120-140	500
140-160	600

REPLACEABLE ELECTRICAL PARTS

PARTS ORDERING INFORMATION

Replacement parts are available from or through your local Tektronix, Inc. Field Office or representative.

Changes to Tektronix instruments are sometimes made to accommodate improved components as they become available, and to give you the benefit of the latest circuit improvements developed in our engineering department. It is therefore important, when ordering parts, to include the following information in your order: Part number, instrument type or number, serial number, and modification number if applicable.

If a part you have ordered has been replaced with a new or improved part, your local Tektronix, Inc. Field Office or representative will contact you concerning any change in part number.

Change information, if any, is located at the rear of this manual.

SPECIAL NOTES AND SYMBOLS

X000	Part first added at this serial number
00X	Part removed after this serial number

ITEM NAME

In the Parts List, an Item Name is separated from the description by a colon (:). Because of space limitations, an Item Name may sometimes appear as incomplete. For further Item Name identification, the U.S. Federal Cataloging Handbook H6-1 can be utilized where possible.

ABBREVIATIONS

ACTR	ACTUATOR	PLSTC	PLASTIC
ASSY	ASSEMBLY	QTZ	QUARTZ
CAP	CAPACITOR	RECP	RECEPTACLE
CER	CERAMIC	RES	RESISTOR
CKT	CIRCUIT	RF	RADIO FREQUENCY
COMP	COMPOSITION	SEL	SELECTED
CONN	CONNECTOR	SEMICOND	SEMICONDUCTOR
ELCTLT	ELECTROLYTIC	SENS	SENSITIVE
ELEC	ELECTRICAL	VAR	VARIABLE
INCAND	INCANDESCENT	WW	WIREWOUND
LED	LIGHT EMITTING DIODE	XFMR	TRANSFORMER
NONWIR	NON WIREWOUND	XTAL	CRYSTAL

CROSS INDEX—MFR. CODE NUMBER TO MANUFACTURER

Mfr. Code	Manufacturer	Address	City, State, Zip
00853	SANGAMO ELECTRIC CO., S. CAROLINA DIV.	P O BOX 128	PICKENS, SC 29671
01121	ALLEN-BRADLEY COMPANY	1201 2ND STREET SOUTH	MILWAUKEE, WI 53204
02114	FERROXCUBE CORPORATION	PO BOX 359, MARION ROAD	SAUGERTIES, NY 12477
03508	GENERAL ELECTRIC COMPANY, SEMI-CONDUCTOR PRODUCTS DEPARTMENT	ELECTRONICS PARK	SYRACUSE, NY 13201
04222	AVX CERAMICS, DIVISION OF AVX CORP.	P O BOX 867, 19TH AVE. SOUTH	MYRTLE BEACH, SC 29577
04713	MOTOROLA, INC., SEMICONDUCTOR PROD. DIV.	5005 E MCDOWELL RD,PO BOX 20923	PHOENIX, AZ 85036
05624	BARBER-COLMAN COMPANY	1300 ROCK STREET	ROCKFORD, IL 61101
08806	GENERAL ELECTRIC CO., MINIATURE LAMP PRODUCTS DEPARTMENT	NELA PARK	CLEVELAND, OH 44112
12294	ERIE TECHNOLOGICAL PROD. OF CANADA LTD.	5 FRASER AVENUE	TRENTON, ONTARIO, CANADA
12697	CLAROSTAT MFG. CO., INC.	LOWER WASHINGTON STREET	DOVER, NH 03820
12954	SIEMENS CORPORATION, COMPONENTS GROUP	8700 E THOMAS RD, P O BOX 1390	SCOTTSDALE, AZ 85252
13511	AMPHENOL CARDRE DIV., BUNKER RAMO CORP.		LOS GATOS, CA 95030
14193	CAL-R, INC.	1601 OLYMPIC BLVD.	SANTA MONICA, CA 90404
14936	GENERAL INSTRUMENT CORP., SEMICONDUCTOR PRODUCTS GROUP	P.O. BOX 600,600 W. JOHN ST.	HICKSVILLE, NY 11802
15454	RODAN INDUSTRIES, INC.	2905 BLUE STAR ST.	ANAHEIM, CA 92806
19396	ILLINOIS TOOL WORKS, INC. PAKTRON DIV.	900 FOLLIN LANE, SE	VIENNA, VA 22180
22526	BERG ELECTRONICS, INC.	YOUK EXPRESSWAY	NEW CUMBERLAND, PA 17070
27014	NATIONAL SEMICONDUCTOR CORP.	2900 SEMICONDUCTOR DR.	SANTA CLARA, CA 95051
28875	IMC MAGNETICS CORP., NEW HAMPSHIRE DIV.	ROUTE 16	ROCHESTER, NH 03867
32997	BOURNS, INC., TRIMPOT PRODUCTS DIV.	1200 COLUMBIA AVE.	RIVERSIDE, CA 92507
50157	MIDWEST COMPONENTS INC.	P. O. BOX 787 1981 PORT CITY BLVD.	MUSKEGON, MI 49443
56289	SPRAGUE ELECTRIC CO.		NORTH ADAMS, MA 01247
71400	BUSSMAN MFG., DIVISION OF MCGRAW-EDISON CO.	2536 W. UNIVERSITY ST.	ST. LOUIS, MO 63107
71590	CENTRALAB ELECTRONICS, DIV. OF GLOBE-UNION, INC.	P O BOX 858	FORT DODGE, IA 50501
72982	ERIE TECHNOLOGICAL PRODUCTS, INC.	644 W. 12TH ST.	ERIE, PA 16512
73138	BECKMAN INSTRUMENTS, INC., HELIPOT DIV.	2500 HARBOR BLVD.	FULLERTON, CA 92634
73445	AMPEREX ELECTRONIC CORP.	230 DUFFY AVE.	HICKSVILLE, L. I., NY 11802
73899	JFD ELECTRONICS COMPONENTS CORP.	PINETREE ROAD	OXFORD, NC 27565
74970	JOHNSON, E. F., CO.	299 10TH AVE. S. W.	WASECA, MN 56093
75042	TRW ELECTRONIC COMPONENTS, IRC FIXED RESISTORS, PHILADELPHIA DIVISION	401 N. BROAD ST.	PHILADELPHIA, PA 19108
76493	BELL INDUSTRIES, INC., MILLER, J. W., DIV.	19070 REYES AVE., P O BOX 5825	COMPTON, CA 90224
77342	AMF INC., POTTER AND BRUMFIELD DIV.	200 RICHLAND CREEK DRIVE	PRINCETON, IN 47671
79727	C-W INDUSTRIES	550 DAVISVILLE RD.,P O BOX 96	WARMINISTER, PA 18974
80009	TEKTRONIX, INC.	P O BOX 500	BEAVERTON, OR 97077
80031	ELECTRA-MIDLAND CORP., MEPCO DIV.	22 COLUMBIA ROAD	MORRISTOWN, NJ 07960
82647	TEXAS INSTRUMENTS, INC., CONTROL PRODUCTS DIV.	34 FOREST ST.	ATTLEBORO, MA 02703
90201	MALLORY CAPACITOR CO., DIV. OF P. R. MALLORY AND CO., INC.	3029 E. WASHINGTON STREET P. O. BOX 372	INDIANAPOLIS, IN 46206
91418	RADIO MATERIALS COMPANY, DIV. OF P.R. MALLORY AND COMPANY, INC.	4242 W BRYN MAWR	CHICAGO, IL 60646
91637	DALE ELECTRONICS, INC.	P. O. BOX 609	COLUMBUS, NE 68601
92702	IMC MAGNETICS CORP., EASTERN DIV.	570 MAIN ST.	WESTBURY, L.I., NY 11591
93410	ESSEX INTERNATIONAL, INC., CONTROLS DIV. LEXINGTON PLANT	P. O. BOX 1007	MANSFIELD, OH 44903

Ckt No.	Tektronix Part No.	Serial/Model No. Eff	Dscont	Name & Description	Mfr Code	Mfr Part Number
A1	670-1956-00	B010100	B239999	CKT BOARD ASSY:INTERFACE	80009	670-1956-00
A1	670-1956-01	B240000		CKT BOARD ASSY:INTERFACE	80009	670-1956-01
A2	670-1370-02	B010100	B209999	CKT BOARD ASSY:LOGIC	80009	670-1370-02
A2	670-1370-04	B210000		CKT BOARD ASSY:LOGIC	80009	670-1370-04
A3	670-1373-06	B010100	B149999	CKT BOARD ASSY:VERT INTERFACE	80009	670-1373-06
A3	670-3186-00	B150000		CKT BOARD ASSY:VERT INTERFACE	80009	670-3186-00
A4	670-1371-05			CKT BOARD ASSY:TRIGGER SELECTOR	80009	670-1371-05
A5	670-1958-00	B010100	B149999	CKT BOARD ASSY:VERT AMPLIFIER	80009	670-1958-00
A5	670-3154-00	B150000	B169999	CKT BOARD ASSY:VERT AMPLIFIER	80009	670-3154-00
A5	670-3154-02	B170000		CKT BOARD ASSY:VERT AMPLIFIER	80009	670-3154-02
A6	670-1957-00	B010100	B019999	CKT BOARD ASSY:HORIZ AMPLIFIER	80009	670-1957-00
A6	670-1957-01	B020000	B069999	CKT BOARD ASSY:HORIZ AMPLIFIER	80009	670-1957-01
A6	670-1957-02	B070000	B239999	CKT BOARD ASSY:HORIZ AMPLIFIER	80009	670-1957-02
A6	670-1957-03	B240000		CKT BOARD ASSY:HORIZ AMPLIFIER	80009	670-1957-03
A7	670-1961-00			CKT BOARD ASSY:SIGNAL OUTPUT	80009	670-1961-00
A8	670-2038-00			CKT BOARD ASSY:CALIBRATION AND MODE SWITCH	80009	670-2038-00
A9	670-1953-00	B010100	B359999X	CKT BOARD ASSY:HV BOARD #2	80009	670-1953-00
A10	670-1952-01	B010100	B199999	CKT BOARD ASSY:HV BOARD #1	80009	670-1952-01
A10	670-1952-03	B200000	B359999	CKT BOARD ASSY:HV BOARD #1	80009	670-1952-03
A10	670-2843-04	B360000		CKT BOARD ASSY:HIGH VOLTAGE	80009	670-2843-04
A11	670-1951-00	B010100	B199999	CKT BOARD ASSY:Z AXIS	80009	670-1951-00
A11	670-1951-03	B200000		CKT BOARD ASSY:Z AXIS	80009	670-1951-03
A12	670-1900-01	B010100	B219999	CKT BOARD ASSY:READOUT	80009	670-1900-01
A12	670-1900-03	B220000		CKT BOARD ASSY:READOUT	80009	670-1900-03
A13	670-1382-01	B010100	B289999	CKT BOARD ASSY:RECTIFIER	80009	670-1382-01
A13	670-1382-06	B290000		CKT BOARD ASSY:RECTIFIER	80009	670-1382-06
A14	670-1376-10	B010100	B269999	CKT BOARD ASSY:REGULATOR	80009	670-1376-10
A14	670-1376-16	B270000	B329999	CKT BOARD ASSY:REGULATOR	80009	670-1376-16
A14	670-1376-17	B330000	B365888	CKT BOARD ASSY:REGULATOR	80009	670-1376-17
A14	670-1376-20	B365889		CKT BOARD ASSY:REGULATOR	80009	670-1376-20
A15	670-2129-00	B010100	B319999	CKT BOARD ASSY:STORAGE	80009	670-2129-00
A15	670-2129-01	B320000		CKT BOARD ASSY:STORAGE	80009	670-2129-01
A16	670-1960-00			CKT BOARD ASSY:EASE SWITCH	80009	670-1960-00
A17	670-0702-03			CKT BOARD ASSY:GRATICULE LIGHTS	80009	670-0702-03
A18	670-4346-00	XB310000		CKT BOARD ASSY:READOUT PROTECTION #1	80009	670-4346-00
A19	670-4856-00	XB360000		CKT BOARD ASSY:FOCUS DC RESTORER	80009	670-4856-00
A20	670-4856-01	XB360000		CKT BOARD ASSY:Z AXIS DC RESTORER	80009	670-4856-01
B1001	119-0390-00			FAN,AXIAL:46 CFM,19W,115 VAC,60 HZ	28875	MBS2107FL8131004
	----- -----			(RACKMOUNT MODEL ONLY)		
B1001	147-0008-00			MOTOR,AC:SHADED P,3200RPM,115V,60HZ	05624	1-AYAA-13080-2
	----- -----			(CABINET MODEL ONLY)		
B1001	119-0396-00			FAN,TUBEAXIAL:115V,47-440HZ,40 CFM	92702	MBC2206F6
	----- -----			(OPTION 5 ONLY)		
C1	290-0271-00			CAP.,FXD,ELCTLT:9UF,+20-15%,125V	56289	109D905C2125F2
C3	290-0302-00			CAP.,FXD,ELCTLT:100UF,10%,20V	12954	D100D20KI
C5	290-0302-00			CAP.,FXD,ELCTLT:100UF,10%,20V	12954	D100D20KI
C7	290-0302-00			CAP.,FXD,ELCTLT:100UF,10%,20V	12954	D100D20KI
C9	290-0271-00			CAP.,FXD,ELCTLT:9UF,+20-15%,125V	56289	109D905C2125F2
C16	283-0068-00			CAP.,FXD,CER DI:0.01UF,+100-0%,500V	56289	19C241
C18	283-0068-00			CAP.,FXD,CER DI:0.01UF,+100-0%,500V	56289	19C241
C44	283-0068-00	B010100	B239999	CAP.,FXD,CER DI:0.01UF,+100-0%,500V	56289	19C241
C44	283-0081-00	B240000		CAP.,FXD,CER DI:0.1UF,+80-20%,25V	56289	36C600
C47	281-0638-00	B010100	B239999X	CAP.,FXD,CER DI:240PF,5%,500V	72982	301000Z5D241J
C48	283-0068-00	B010100	B239999	CAP.,FXD,CER DI:0.01UF,+100-0%,500V	56289	19C241
C48	283-0081-00	B240000		CAP.,FXD,CER DI:0.1UF,+80-20%,25V	56289	36C600
C55	283-0003-00			CAP.,FXD,CER DI:0.01UF,+80-20%,150V	72982	855-558Z5U-103Z
C58	283-0003-00			CAP.,FXD,CER DI:0.01UF,+80-20%,150V	72982	855-558Z5U-103Z
C59	283-0672-00			CAP.,FXD,MICA D:200PF,1%,500V	00853	D155F201F0
C60	281-0564-00			CAP.,FXD,CER DI:24PF,5%,500V	72982	301-000C0G0240J
C67	281-0605-00			CAP.,FXD,CER DI:200PF,10%,500V	04222	7001-1375

Ckt No.	Tektronix Part No.	Serial/Model No. Eff	Dscont	Name & Description	Mfr Code	Mfr Part Number
C76	283-0000-00			CAP.,FXD,CER DI:0.001UF,+100-0%,500V	72982	831-516E102P
C89	283-0003-00			CAP.,FXD,CER DI:0.01UF,+80-20%,150V	72982	855-558Z5U-103Z
C137	283-0000-00			CAP.,FXD,CER DI:0.001UF,+100-0%,500V	72982	831-516E102P
C138	281-0503-00			CAP.,FXD,CER DI:8PF,+/-0.5PF,500V	72982	301-000C0H0809D
C146	281-0547-00			CAP.,FXD,CER DI:2.7PF,10%,500V	72982	301-000C0J0279C
C148	281-0503-00			CAP.,FXD,CER DI:8PF,+/-0.5PF,500V	72982	301-000C0H0809D
C149	283-0000-00			CAP.,FXD,CER DI:0.001UF,+100-0%,500V	72982	831-516E102P
C152	283-0000-00			CAP.,FXD,CER DI:0.001UF,+100-0%,500V	72982	831-516E102P
C166	281-0547-00			CAP.,FXD,CER DI:2.7PF,10%,500V	72982	301-000C0J0279C
C168	281-0503-00			CAP.,FXD,CER DI:8PF,+/-0.5PF,500V	72982	301-000C0H0809D
C193	283-0026-00			CAP.,FXD,CER DI:0.2UF,+80-20%,25V	56289	274C3
C195	283-0003-00			CAP.,FXD,CER DI:0.01UF,+80-20%,150V	72982	855-558Z5U-103Z
C196	283-0026-00			CAP.,FXD,CER DI:0.2UF,+80-20%,25V	56289	274C3
C198	283-0026-00			CAP.,FXD,CER DI:0.2UF,+80-20%,25V	56289	274C3
C207	281-0538-00	B010100	B149999X	CAP.,FXD,CER DI:1PF,20%,500V	80009	281-0538-00
C208	281-0528-00	B010100	B149999X	CAP.,FXD,CER DI:82PF,+/-8.2PF,500V	72982	301-000U2M0820K
C215	281-0589-00	B010100	B149999X	CAP.,FXD,CER DI:170PF,5%,500V	72982	301000Z5D0171J
C217	281-0537-00	B010100	B149999X	CAP.,FXD,CER DI:0.68PF,20%,600V	80009	281-0537-00
C220	283-0177-00	B010100	B149999X	CAP.,FXD,CER DI:1UF,+80-20%,25V	72982	8131N039 E 105Z
C227	281-0503-00	B010100	B149999X	CAP.,FXD,CER DI:8PF,+/-0.5PF,500V	72982	301-000C0H0809D
C260	283-0000-00	B010100	B149999X	CAP.,FXD,CER DI:0.001UF,+100-0%,500V	72982	831-516E102P
C301	283-0003-00			CAP.,FXD,CER DI:0.01UF,+80-20%,150V	72982	855-558Z5U-103Z
C305	283-0004-00			CAP.,FXD,CER DI:0.02UF,+80-20%,150V	72982	855-558-Z5V0203Z
C322	281-0572-00			CAP.,FXD,CER DI:6.8PF,+/-0.5PF,500V	72982	301-000C0H0689D
C329	281-0572-00			CAP.,FXD,CER DI:6.8PF,+/-0.5PF,500V	72982	301-000C0H0689D
C342	283-0000-00			CAP.,FXD,CER DI:0.001UF,+100-0%,500V	72982	831-516E102P
C348	283-0003-00			CAP.,FXD,CER DI:0.01UF,+80-20%,150V	72982	855-558Z5U-103Z
C401	290-0522-00	B010100	B149999X	CAP.,FXD,ELCTLT:1UF,20%,50V	56289	196D105X0050HA1
C418	281-0629-00	B010100	B149999X	CAP.,FXD,CER DI:33PF,5%,600V	72982	308-000C0G0330J
C420	281-0153-00	B010100	B149999X	CAP.,VAR,AIR DI:1.7-10PF,250V	74970	187-0106-005
C421	281-0504-00	B010100	B149999X	CAP.,FXD,CER DI:10PF,+/-1PF,500V	72982	301-055C0G0100F
C425	281-0153-00	B010100	B149999X	CAP.,VAR,AIR DI:1.7-10PF,250V	74970	187-0106-005
C427	281-0160-00	B010100	B149999X	CAP.,VAR,CER DI:7-25PF,350V	72982	538-011B7-25
C433	290-0522-00	B010100	B149999X	CAP.,FXD,ELCTLT:1UF,20%,50V	56289	196D105X0050HA1
C455	283-0187-00	B010100	B029999	CAP.,FXD,CER DI:0.047UF,10%,400V	72982	8131N401X5R0473K
C455	283-0341-00	B030000	B149999X	CAP.,FXD,CER DI:0.047UF,10%,100V	72982	8121N153X7R0473K
C456	283-0199-00	B010100	B149999X	CAP.,FXD,CER DI:25PF,10%,4000V	56289	29C568
C458	283-0116-00	B010100	B149999X	CAP.,FXD,CER DI:820PF,5%,500V	72982	801-547B821J
C459	290-0522-00	B010100	B149999X	CAP.,FXD,ELCTLT:1UF,20%,50V	56289	196D105X0050HA1
C465	283-0211-00	B010100	B149999X	CAP.,FXD,CER DI:0.1UF,10%,200V	72982	8141N210X7R0104K
C466	283-0100-00	B010100	B149999X	CAP.,FXD,CER DI:0.0047UF,10%,200V	56289	273C3
C468	283-0005-00	B010100	B149999X	CAP.,FXD,CER DI:0.01UF,+100-0%,250V	72982	8131N300Z5U0103P
C480	290-0522-00	B010100	B149999X	CAP.,FXD,ELCTLT:1UF,20%,50V	56289	196D105X0050HA1
C486	283-0000-00	B010100	B149999X	CAP.,FXD,CER DI:0.001UF,+100-0%,500V	72982	831-516E102P
C491	283-0110-00	XB030000	B149999X	CAP.,FXD,CER DI:0.005UF,+80-20%,150V	56289	19C242B
C494	283-0000-00	B010100	B149999X	CAP.,FXD,CER DI:0.001UF,+100-0%,500V	72982	831-516E102P
C496	281-0523-00	B010100	B149999X	CAP.,FXD,CER DI:100PF,+/-20PF,500V	72982	301-000U2M0101M
C521	----- -----	B010100	B019999X	(ADDED IF NECESSARY)		
C522	----- -----	B010100	B019999X	(ADDED IF NECESSARY)		
C527	281-0504-00	B010100	B019999X	CAP.,FXD,CER DI:10PF,+/-1PF,500V	72982	301-055C0G0100F
C545	281-0550-00			CAP.,FXD,CER DI:120PF,10%,500V	04222	7001-1373
C552	283-0024-00			CAP.,FXD,CER DI:0.1UF,+80-20%,30V	72982	8121N083Z5U0104Z
C555	283-0083-00			CAP.,FXD,CER DI:0.0047UF,20%,500V	72982	811-565C472J
C566	281-0095-00	XB020000	B069999	CAP.,VAR,PLSTC:0.25-1.5PF,600V	12294	057001
C566	281-0064-00	B070000		CAP.,VAR,PLSTC:0.25-1.5PF,600V	72982	530-002
C567	281-0557-00	B010100	B019999X	CAP.,FXD,CER DI:1.8PF,10%,500V	72982	301-000C0K0189B
C568	281-0097-00	B010100	B019999	CAP.,VAR,CER DI:9-35PF,200V	72982	538-006-D9-35
C568	281-0089-00	B020000	B069999X	CAP.,VAR,CER DI:2-8PF,350V	72982	538-006-A2-8
C569	281-0579-00	B010100	B019999X	CAP.,FXD,CER DI:21PF,5%,500V	72982	301-050C0G0210J
C571	283-0002-00			CAP.,FXD,CER DI:0.01UF,+80-20%,500V	72982	811-546E103Z
C574	283-0002-00			CAP.,FXD,CER DI:0.01UF,+80-20%,500V	72982	811-546E103Z
C575	283-0083-00			CAP.,FXD,CER DI:0.0047UF,20%,500V	72982	811-565C472J

Ckt No.	Tektronix Part No.	Serial/Model No. Eff	Dscont	Name & Description	Mfr Code	Mfr Part Number
C584	281-0546-00	XB070000		CAP.,FXD,CER DI:330PF,10%,500V	04222	7001-1380
C586	281-0095-00	XB020000	B069999	CAP.,VAR,PLSTC:0.25-1.5PF,600V	12294	057001
C586	281-0064-00	B070000		CAP.,VAR,PLSTC:0.25-1.5PF,600V	72982	530-002
C587	281-0557-00	B010100	B019999X	CAP.,FXD,CER DI:1.8PF,10%,500V	72982	301-000C0K0189B
C588	281-0092-00	B010100	B019999	CAP.,VAR,CER DI:9-35PF,200V	72982	538-011 D9-35
C588	281-0091-00	B020000		CAP.,VAR,CER DI:2-8PF	72982	538-011 A2-8
C589	281-0579-00	B010100	B019999X	CAP.,FXD,CER DI:21PF,5%,500V	72982	301-050C0G0210J
C591	283-0002-00			CAP.,FXD,CER DI:0.01UF,+80-20%,500V	72982	811-546E103Z
C593	283-0002-00			CAP.,FXD,CER DI:0.01UF,+80-20%,500V	72982	811-546E103Z
C595	283-0081-00	B010100	B060599	CAP.,FXD,CER DI:0.1UF,+80-20%,25V	56289	36C600
C595	283-0024-00	B060600		CAP.,FXD,CER DI:0.1UF,+80-20%,30V	72982	8121N083Z5U0104Z
C597	283-0081-00	B010100	B060599	CAP.,FXD,CER DI:0.1UF,+80-20%,25V	56289	36C600
C597	283-0024-00	B060600		CAP.,FXD,CER DI:0.1UF,+80-20%,30V	72982	8121N083Z5U0104Z
C599	283-0081-00	B010100	B060599	CAP.,FXD,CER DI:0.1UF,+80-20%,25V	56289	36C600
C599	283-0024-00	B060600		CAP.,FXD,CER DI:0.1UF,+80-20%,30V	72982	8121N083Z5U0104Z
C605	281-0612-00	B010100	B299999	CAP.,FXD,CER DI:5.6PF,+/-0.5PF,500V	72982	374-001C0H0569D
C605	281-0584-00	B300000		CAP.,FXD,CER DI:100PF,5%,500V	72982	0301000Y5E0101J
C610	283-0000-00			CAP.,FXD,CER DI:0.001UF,+100-0%,500V	72982	831-516E102P
C615	281-0513-00			CAP.,FXD,CER DI:27PF,+/-5.4PF,500V	72982	301-000P2G0270M
C619	283-0000-00			CAP.,FXD,CER DI:0.001UF,+100-0%,500V	72982	831-516E102P
C622	283-0003-00			CAP.,FXD,CER DI:0.01UF,+80-20%,150V	72982	855-558Z5U-103Z
C637	281-0510-00			CAP.,FXD,CER DI:22PF,+/-4.4PF,500V	72982	301-000C0G0220M
C639	283-0111-00			CAP.,FXD,CER DI:0.1UF,20%,50V	72982	8121-N088Z5U104M
C643	283-0111-00			CAP.,FXD,CER DI:0.1UF,20%,50V	72982	8121-N088Z5U104M
C662	283-0080-00			CAP.,FXD,CER DI:0.022UF,+80-20%,25V	56289	19C611
C667	283-0000-00			CAP.,FXD,CER DI:0.001UF,+100-0%,500V	72982	831-516E102P
C669	283-0111-00			CAP.,FXD,CER DI:0.1UF,20%,50V	72982	8121-N088Z5U104M
C679	283-0111-00			CAP.,FXD,CER DI:0.1UF,20%,50V	72982	8121-N088Z5U104M
C806	290-0468-00			CAP.,FXD,ELCTLT:250UF,+75-10%,150V	56289	68D10470
C808	290-0507-00			CAP.,FXD,ELCTLT:1800UF,+75-10%,75V	56289	68D10472
C809	290-0507-00			CAP.,FXD,ELCTLT:1800UF,+75-10%,75V	56289	68D10472
C810	285-0555-00			CAP.,FXD,PLSTC:0.1UF,20%,100V	56289	410P10401M245
C811	290-0581-00			CAP.,FXD,ELCTLT:14,000UF,+75-10%,25V	56289	68D10489
C813	290-0506-00			CAP.,FXD,ELCTLT:9600UF,+100-10%,25V	56289	68D10471
C814	290-0506-00			CAP.,FXD,ELCTLT:9600UF,+100-10%,25V	56289	68D10471
C820	285-0555-00			CAP.,FXD,PLSTC:0.1UF,20%,100V	56289	410P10401M245
C821	290-0508-00			CAP.,FXD,ELCTLT:18,000UF,+100-10%,15V	56289	68D10444
C823	283-0004-00			CAP.,FXD,CER DI:0.02UF,+80-20%,150V	72982	855-558-Z5V0203Z
C827	283-0077-00	XB080000		CAP.,FXD,CER DI:330PF,5%,500V	56289	40C94A3
C858	283-0078-00			CAP.,FXD,CER DI:0.001UF,20%,500V	56289	20C114A8
C866	283-0078-00			CAP.,FXD,CER DI:0.001UF,20%,500V	56289	20C114A8
C876	283-0328-00	XB070000		CAP.,FXD,CER DI:0.03UF,+80-20%,200V	72982	8131N225Z5U0303Z
C880	283-0638-00			CAP.,FXD,MICA D:130PF,1%,100V	00853	D151F131F0
C889	290-0415-00	B010100	B365888	CAP.,FXD,ELCTLT:5.6UF,10%,35V	56289	150D565X9035B2
C889	290-0782-00	B365889		CAP.,FXD,ELCTLT:4.7UF,+75-10%,35V	56289	503D475G035AS
C923	281-0591-00	B010100	B375849	CAP.,FXD,CER DI:5600PF,20%,200V	72982	393001Z5V0562Z
C923	283-0180-00	B375850		CAP.,FXD,CER DI:5600PF,20%,200V	72982	8121N204 E 562M
C936	283-0178-00	XB070000		CAP.,FXD,CER DI:0.1UF,+80-20%,100V	72982	8131N145651 104Z
C943	283-0078-00	XB090000		CAP.,FXD,CER DI:0.001UF,20%,500V	56289	20C114A8
C950	283-0083-00	B010100	B366056	CAP.,FXD,CER DI:0.0047UF,20%,500V	72982	811-565C472J
C950	283-0239-00	B366057		CAP.,FXD,CER DI:0.022UF,10%,50V	72982	8121N083X7R0223K
C975	283-0000-00			CAP.,FXD,CER DI:0.001UF,+100-0%,500V	72982	831-516E102P
C979	281-0591-00	B010100	B375849	CAP.,FXD,CER DI:5600PF,20%,200V	72982	393001Z5V0562Z
C979	283-0180-00	B375850		CAP.,FXD,CER DI:5600PF,20%,200V	72982	8121N204 E 562M
C985	283-0083-00			CAP.,FXD,CER DI:0.0047UF,20%,500V	72982	811-565C472J
C1002	285-0562-00			CAP.,FXD,PLSTC:0.47UF,20%,400V	56289	410P47404
C1064	285-0703-00			CAP.,FXD,PLSTC:0.1UF,5%,100V	56289	410P10451
C1079	281-0605-00			CAP.,FXD,CER DI:200PF,10%,500V	04222	7001-1375
C1105	283-0003-00			CAP.,FXD,CER DI:0.01UF,+80-20%,150V	72982	855-558Z5U-103Z
C1124	283-0004-00	B010100	B343512	CAP.,FXD,CER DI:0.02UF,+80-20%,150V	72982	855-558-Z5V0203Z
C1124	283-0068-00	B343513		CAP.,FXD,CER DI:0.01UF,+100-0%,500V	56289	19C241
C1126	283-0004-00			CAP.,FXD,CER DI:0.02UF,+80-20%,150V	72982	855-558-Z5V0203Z
C1128	283-0111-00			CAP.,FXD,CER DI:0.1UF,20%,50V	72982	8121-N088Z5U104M

Ckt No.	Tektronix Part No.	Serial/Model No. Eff	Dscont	Name & Description	Mfr Code	Mfr Part Number
C1131	283-0004-00	B010100	B343512	CAP.,FXD,CER DI:0.02UF,+80-20%,150V	72982	855-558-Z5V0203Z
C1131	283-0068-00	B343513		CAP.,FXD,CER DI:0.01UF,+100-0%,500V	56289	19C241
C1138	281-0053-00			CAP.,VAR,PLSTC:0.7-3PF,350V	72982	535-060 0.7-3
C1141	283-0004-00			CAP.,FXD,CER DI:0.02UF,+80-20%,150V	72982	855-558-Z5V0203Z
C1144	283-0004-00	B010100	B343512	CAP.,FXD,CER DI:0.02UF,+80-20%,150V	72982	855-558-Z5V0203Z
C1144	283-0068-00	B343513		CAP.,FXD,CER DI:0.01UF,+100-0%,500V	56289	19C241
C1146	283-0004-00			CAP.,FXD,CER DI:0.02UF,+80-20%,150V	72982	855-558-Z5V0203Z
C1148	283-0111-00			CAP.,FXD,CER DI:0.1UF,20%,50V	72982	8121-N088Z5U104M
C1151	283-0004-00	B010100	B343512	CAP.,FXD,CER DI:0.02UF,+80-20%,150V	72982	855-558-Z5V0203Z
C1151	283-0068-00	B343513		CAP.,FXD,CER DI:0.01UF,+100-0%,500V	56289	19C241
C1158	283-0053-00			CAP.,FXD,CER DI:130PF,1%,500V	72982	821-524A131F
C1184	283-0003-00			CAP.,FXD,CER DI:0.01UF,+80-20%,150V	72982	855-558Z5U-103Z
C1188	283-0003-00			CAP.,FXD,CER DI:0.01UF,+80-20%,150V	72982	855-558Z5U-103Z
C1193	283-0003-00			CAP.,FXD,CER DI:0.01UF,+80-20%,150V	72982	855-558Z5U-103Z
C1196	283-0004-00	B010100	B343512	CAP.,FXD,CER DI:0.02UF,+80-20%,150V	72982	855-558-Z5V0203Z
C1196	283-0068-00	B343513		CAP.,FXD,CER DI:0.01UF,+100-0%,500V	56289	19C241
C1204	281-0605-00	XB020000	B359999X	CAP.,FXD,CER DI:200PF,10%,500V	04222	7001-1375
C1213	283-0082-00	XB360000		CAP.,FXD,CER DI:0.01UF,+80-20%,4000V	56289	112C29
C1214	283-0082-00	XB360000		CAP.,FXD,CER DI:0.01UF,+80-20%,4000V	56289	112C29
C1215	285-0629-00	B010100	B359999X	CAP.,FXD,PLSTC:0.047UF,20%,100V	56289	410P47301
C1222	290-0287-00	B010100	B359999X	CAP.,FXD,ELCTLT:47UF,20%,25V	56289	150D475X0035B2
C1224	290-0527-00	XB360000		CAP.,FXD,ELCTLT:15UF,20%,20V	90201	TDC156M020FL
C1225	283-0203-00	XB360000		CAP.,FXD,CER DI:0.47UF,20%,50V	72982	8131N075 E474M
C1226	283-0300-00	B010100	B359999X	CAP.,FXD,CER DI:0.001UF,+80-20%,10,000V	72982	3910BW509C142K
C1228	283-0300-00	B010100	B359999	CAP.,FXD,CER DI:0.001UF,+80-20%,10,000V	72982	3910BW509C142K
C1228	283-0021-00	B360000		CAP.,FXD,CER DI:0.001UF,20%,5000V	72982	848-556-Y5S-102M
C1229	283-0300-00	B010100	B359999X	CAP.,FXD,CER DI:0.001UF,+80-20%,10,000V	72982	3910BW509C142K
C1232	283-0105-00	B010100	B359999	CAP.,FXD,CER DI:0.01UF,+80-20%,2000V	56289	41C316
C1232	290-0164-00	B360000		CAP.,FXD,ELCTLT:1UF,+50-10%,150V	56289	500D105F150BA7
C1234	283-0105-00	B010100	B359999X	CAP.,FXD,CER DI:0.01UF,+80-20%,2000V	56289	41C316
C1235	281-0513-00	XB360000		CAP.,FXD,CER DI:27PF,+/-5.4PF,500V	72982	301-000P2G0270M
C1237	283-0402-00	XB360000		CAP.,FXD,CER,DI:0.001UF,+80-20%,4000V	72982	3904-F-Z5V103Z
C1238	283-0402-00	XB360000		CAP.,FXD,CER,DI:0.001UF,+80-20%,4000V	72982	3904-F-Z5V103Z
C1240	290-0391-00	B010100	B359999	CAP.,FXD,ELCTLT:15UF,10%,30V	56289	109D156X9030C2
C1240	283-0013-00	B360000		CAP.,FXD,CER DI:0.01UF,+100-0%,1000V	56289	33C29A7
C1241	283-0203-00	B010100	B359999X	CAP.,FXD,CER DI:0.47UF,20%,50V	72982	8131N075 E474M
C1247	283-0044-00	B010100	B359999X	CAP.,FXD,CER DI:0.001UF,3000V	72982	3903BW002Y5S102M
C1250	283-0013-00	B010100	B359999	CAP.,FXD,CER DI:0.01UF,+100-0%,1000V	56289	33C29A7
C1250	290-0164-00	B360000		CAP.,FXD,ELCTLT:1UF,+50-10%,150V	56289	500D105F150BA7
C1253	281-0513-00	XB360000		CAP.,FXD,CER DI:27PF,+/-5.4PF,500V	72982	301-000P2G0270M
C1254	283-0044-00	B010100	B359999	CAP.,FXD,CER DI:0.001UF,3000V	72982	3903BW002Y5S102M
C1254	283-0402-00	B360000		CAP.,FXD,CER,DI:0.001UF,+80-20%,4000V	72982	3904-F-Z5V103Z
C1255	283-0044-00	B010100	B359999X	CAP.,FXD,CER DI:0.001UF,3000V	72982	3903BW002Y5S102M
C1257	281-0513-00	B010100	B359999	CAP.,FXD,CER DI:27PF,+/-5.4PF,500V	72982	301-000P2G0270M
C1257	283-0402-00	B360000		CAP.,FXD,CER,DI:0.001UF,+80-20%,4000V	72982	3904-F-Z5V103Z
C1258	290-0164-00	B010100	B359999	CAP.,FXD,ELCTLT:1UF,+50-10%,150V	56289	500D105F150BA7
C1258	283-0402-00	B360000		CAP.,FXD,CER,DI:0.001UF,+80-20%,4000V	72982	3904-F-Z5V103Z
C1263	283-0605-00	XB360000		CAP.,FXD,MICA D:678PF,1%,300V	00853	D153F6780F0
C1264	290-0164-00	B010100	B359999	CAP.,FXD,ELCTLT:1UF,+50-10%,150V	56289	500D105F150BA7
C1264	283-0034-00	B360000		CAP.,FXD,CER DI:0.005UF,20%,4000V	56289	41C107A
C1266	281-0513-00	B010100	B359999X	CAP.,FXD,CER DI:27PF,+/-5.4PF,500V	72982	301-000P2G0270M
C1268	283-0044-00	B010100	B359999X	CAP.,FXD,CER DI:0.001UF,3000V	72982	3903BW002Y5S102M
C1269	283-0105-00	B010100	B359999X	CAP.,FXD,CER DI:0.01UF,+80-20%,2000V	56289	41C316
C1275	281-0543-00	B010100	B359999X	CAP.,FXD,CER DI:270PF,10%,500V	72982	301055X5P271K
C1276	283-0044-00	B010100	B199999	CAP.,FXD,CER DI:0.001UF,3000V	72982	3903BW002Y5S102M
C1276	283-0261-00	B200000	B359999X	CAP.,FXD,CER DI:0.01UF,20%,4000V	56289	575C1A1
C1285	281-0524-00	XB360000		CAP.,FXD,CER DI:150PF,+/-30PF,500V	04222	7001-1381
C1293	285-1099-00	XB360000		CAP.,FXD,PLSTC:0.047UF,20%,200V	19396	473M02PT605
C1298	290-0287-00	XB360000		CAP.,FXD,ELCTLT:47UF,20%,25V	56289	150D475X0035B2

Ckt No.	Tektronix Part No.	Serial/Model No. Eff	Dscont	Name & Description	Mfr Code	Mfr Part Number
C1318	283-0023-00			CAP.,FXD,CER DI:0.1UF,+80-20%,12V	91418	MX0104Z1205R5
C1325	283-0178-00			CAP.,FXD,CER DI:0.1UF,+80-20%,100V	72982	8131N145651 104Z
C1327	283-0178-00			CAP.,FXD,CER DI:0.1UF,+80-20%,100V	72982	8131N145651 104Z
C1329	283-0177-00			CAP.,FXD,CER DI:1UF,+80-20%,25V	72982	8131N039 E 105Z
C1331	283-0067-00			CAP.,FXD,CER DI:0.001UF,10%,200V	72982	835-515B102K
C1337	290-0246-00			CAP.,FXD,ELCTLT:3.3UF,10%,15V	56289	162D335X9015CD2
C1347	283-0000-00			CAP.,FXD,CER DI:0.001UF,+100-0%,500V	72982	831-516E102P
C1357	290-0267-00			CAP.,FXD,ELCTLT:1UF,20%,35V	56289	162D105X0035CD2
C1360	283-0000-00			CAP.,FXD,CER DI:0.001UF,+100-0%,500V	72982	831-516E102P
C1369	290-0135-00			CAP.,FXD,ELCTLT:15UF,20%,20V	56289	150D156X0020B2
C1391	283-0239-00	B010100	B079999	CAP.,FXD,CER DI:0.022UF,10%,50V	72982	8121N083X7R0223K
C1391	283-0211-00	B080000		CAP.,FXD,CER DI:0.1UF,10%,200V	72982	8141N210X7R0104K
C1405	283-0111-00	XB080000		CAP.,FXD,CER DI:0.1UF,20%,50V	72982	8121-N088Z5U104M
C1406	283-0000-00			CAP.,FXD,CER DI:0.001UF,+100-0%,500V	72982	831-516E102P
C1435	283-0178-00			CAP.,FXD,CER DI:0.1UF,+80-20%,100V	72982	8131N145651 104Z
C1503	283-0108-00			CAP.,FXD,CER DI:220PF,10%,200V	56289	272C13
C1505	283-0211-00			CAP.,FXD,CER DI:0.1UF,10%,200V	72982	8141N210X7R0104K
C1507	283-0169-00			CAP.,FXD,CER DI:0.022UF,10%,200V	72982	8131N225X5R0223K
C1587	283-0092-00			CAP.,FXD,CER DI:0.03UF,+80-20%,200V	72982	845-534E303Z
C1589	283-0178-00			CAP.,FXD,CER DI:0.1UF,+80-20%,100V	72982	8131N145651 104Z
C1591	283-0178-00			CAP.,FXD,CER DI:0.1UF,+80-20%,100V	72982	8131N145651 104Z
C1593	283-0178-00			CAP.,FXD,CER DI:0.1UF,+80-20%,100V	72982	8131N145651 104Z
C1595	283-0178-00			CAP.,FXD,CER DI:0.1UF,+80-20%,100V	72982	8131N145651 104Z
C1597	283-0178-00			CAP.,FXD,CER DI:0.1UF,+80-20%,100V	72982	8131N145651 104Z
C2101	283-0004-00			CAP.,FXD,CER DI:0.02UF,+80-20%,150V	72982	855-558-Z5V0203Z
C2109	283-0003-00			CAP.,FXD,CER DI:0.01UF,+80-20%,150V	72982	855-558Z5U-103Z
C2112	283-0077-00			CAP.,FXD,CER DI:330PF,5%,500V	56289	40C94A3
C2115	290-0534-00			CAP.,FXD,ELCTLT:1UF,20%,35V	56289	196D105X0035HA1
C2117	290-0534-00			CAP.,FXD,ELCTLT:1UF,20%,35V	56289	196D105X0035HA1
C2119	290-0534-00			CAP.,FXD,ELCTLT:1UF,20%,35V	56289	196D105X0035HA1
C2121	283-0594-00			CAP.,FXD,MICA D:0.001UF,1%,100V	00853	D151F102F0
C2135	285-0698-00			CAP.,FXD,PLSTC:0.0082UF,5%,100V	56289	410P82251
C2140	283-0103-00			CAP.,FXD,CER DI:180PF,5%,500V	56289	40C638
C2144	281-0544-00			CAP.,FXD,CER DI:5.6PF,10%,500V	72982	301-000C0H0569D
C2145	290-0534-00			CAP.,FXD,ELCTLT:1UF,20%,35V	56289	196D105X0035HA1
C2155	283-0103-00			CAP.,FXD,CER DI:180PF,5%,500V	56289	40C638
C2183	283-0032-00			CAP.,FXD,CER DI:470PF,5%,500V	72982	0831085Z5E00471J
C2185	283-0004-00			CAP.,FXD,CER DI:0.02UF,+80-20%,150V	72982	855-558-Z5V0203Z
C2214	283-0032-00			CAP.,FXD,CER DI:470PF,5%,500V	72982	0831085Z5E00471J
C2242	283-0000-00			CAP.,FXD,CER DI:0.001UF,+100-0%,500V	72982	831-516E102P
C2244	283-0004-00			CAP.,FXD,CER DI:0.02UF,+80-20%,150V	72982	855-558-Z5V0203Z
C2255	283-0000-00			CAP.,FXD,CER DI:0.001UF,+100-0%,500V	72982	831-516E102P
C2281	283-0054-00	XB220000		CAP.,FXD,CER DI:150PF,5%,200V	72982	855-535U2J151J
C2341	283-0177-00	XB150000		CAP.,FXD,CER DI:1UF,+80-20%,25V	72982	8131N039 E 105Z
C2345	283-0159-00	XB150000		CAP.,FXD,CER DI:18PF,5%,50V	72982	8111B065C0G0180J
C2347	281-0627-00	XB150000		CAP.,FXD,CER DI:1PF,+/-0.25PF,500V	72982	301-000C0K0109C
C2348	283-0185-00	XB150000		CAP.,FXD,CER DI:2.5PF,5%,50V	72982	8101B057C0K0295B
C2355	283-0159-00	XB150000		CAP.,FXD,CER DI:18PF,5%,50V	72982	8111B065C0G0180J
C2357	281-0627-00	XB150000		CAP.,FXD,CER DI:1PF,+/-0.25PF,500V	72982	301-000C0K0109C
C2358	283-0185-00	XB150000		CAP.,FXD,CER DI:2.5PF,5%,50V	72982	8101B057C0K0295B
C2366	281-0562-00	XB150000		CAP.,FXD,CER DI:39PF,10%,500V	72982	301-000U2J0390K
C2376	281-0562-00	XB150000		CAP.,FXD,CER DI:39PF,10%,500V	72982	301-000U2J0390K
C2387	281-0509-00	XB150000		CAP.,FXD,CER DI:15PF,+/-1.5PF,500V	72982	301-000C0G0150K
C2397	281-0509-00	XB150000		CAP.,FXD,CER DI:15PF,+/-1.5PF,500V	72982	301-000C0G0150K
C2403	283-0000-00	XB150000		CAP.,FXD,CER DI:0.001UF,+100-0%,500V	72982	831-516E102P
C2409	283-0077-00	XB150000		CAP.,FXD,CER DI:330PF,5%,500V	56289	40C94A3
C2411	281-0564-00	XB150000		CAP.,FXD,CER DI:24PF,5%,500V	72982	301-000C0G0240J
C2416	281-0123-00	XB150000		CAP.,VAR,CER DI:5-25PF,100V	72982	518-000A5-25
C2418	281-0158-00	XB150000		CAP.,VAR,CER DI:7-45PF,50V	73899	DVJ-5006

Ckt No.	Tektronix Part No.	Serial/Model No. Eff	Dscont	Name & Description	Mfr Code	Mfr Part Number
C2429	283-0003-00	XB150000		CAP.,FXD,CER DI:0.01UF,+80-20%,150V	72982	855-558Z5U-103Z
C2445	283-0000-00	XB150000		CAP.,FXD,CER DI:0.001UF,+100-0%,500V	72982	831-516E102P
C2448	281-0661-00	XB150000		CAP.,FXD,CER DI:0.8PF,+/-0.1PF,500V	72982	301-000C0K0808B
C2456	281-0122-00	XB150000		CAP.,VAR,CER DI:2.5-9PF,100V	72982	518-000A2.5-9
C2465	283-0103-00	XB150000		CAP.,FXD,CER DI:180PF,5%,500V	56289	40C638
C2469	281-0167-00	XB150000		CAP.,VAR,CER DI:9-45PF,200V	72982	538-011-D 9-45
C2509	283-0649-00	XB150000		CAP.,FXD,MICA D:105PF,1%,300V	00853	D153F1050F0
C2511	281-0205-00	XB150000		CAP.,VAR,PLSTC:4-65PF,100V	80031	2810C5R565QJ02F0
C2524	283-0000-00	XB150000		CAP.,FXD,CER DI:0.001UF,+100-0%,500V	72982	831-516E102P
C2545	283-0000-00	XB150000		CAP.,FXD,CER DI:0.001UF,+100-0%,500V	72982	831-516E102P
C2548	281-0661-00	XB150000		CAP.,FXD,CER DI:0.8PF,+/-0.1PF,500V	72982	301-000C0K0808B
C2565	283-0103-00	XB150000		CAP.,FXD,CER DI:180PF,5%,500V	56289	40C638
C2593	283-0111-00	XB150000	B349999	CAP.,FXD,CER DI:0.1UF,20%,50V	72982	8121-N088Z5U104M
C2593	283-0178-00	B350000		CAP.,FXD,CER DI:0.1UF,+80-20%,100V	72982	8131N145651 104Z
C2595	290-0527-00	XB150000		CAP.,FXD,ELCTLT:15UF,20%,20V	90201	TDC156M020FL
C2597	290-0527-00	XB150000		CAP.,FXD,ELCTLT:15UF,20%,20V	90201	TDC156M020FL
CR26	152-0141-02			SEMICOND DEVICE:SILICON,30V,150MA	80009	152-0141-02
CR27	152-0141-02			SEMICOND DEVICE:SILICON,30V,150MA	80009	152-0141-02
CR33	152-0141-02			SEMICOND DEVICE:SILICON,30V,150MA	80009	152-0141-02
CR42	152-0141-02	B010100	B239999X	SEMICOND DEVICE:SILICON,30V,150MA	80009	152-0141-02
CR44	152-0141-02	XB240000		SEMICOND DEVICE:SILICON,30V,150MA	80009	152-0141-02
CR48	152-0141-02	XB240000		SEMICOND DEVICE:SILICON,30V,150MA	80009	152-0141-02
CR84	152-0333-00			SEMICOND DEVICE:SILICON,55V,200MA	80009	152-0333-00
CR85	152-0333-00			SEMICOND DEVICE:SILICON,55V,200MA	80009	152-0333-00
CR93	152-0141-02			SEMICOND DEVICE:SILICON,30V,150MA	80009	152-0141-02
CR124	152-0141-02			SEMICOND DEVICE:SILICON,30V,150MA	80009	152-0141-02
CR125	152-0141-02			SEMICOND DEVICE:SILICON,30V,150MA	80009	152-0141-02
CR126	152-0141-02			SEMICOND DEVICE:SILICON,30V,150MA	80009	152-0141-02
CR130	152-0141-02			SEMICOND DEVICE:SILICON,30V,150MA	80009	152-0141-02
CR140	152-0141-02			SEMICOND DEVICE:SILICON,30V,150MA	80009	152-0141-02
CR155	152-0141-02			SEMICOND DEVICE:SILICON,30V,150MA	80009	152-0141-02
CR160	152-0141-02			SEMICOND DEVICE:SILICON,30V,150MA	80009	152-0141-02
CR238	152-0141-02			SEMICOND DEVICE:SILICON,30V,150MA	80009	152-0141-02
CR341	152-0141-02			SEMICOND DEVICE:SILICON,30V,150MA	80009	152-0141-02
CR349	152-0141-02			SEMICOND DEVICE:SILICON,30V,150MA	80009	152-0141-02
CR460	152-0269-00	B010100	B149999X	SEMICOND DEVICE:SILICON,VAR VCAP.,4V,33PF	80009	152-0269-00
CR461	152-0269-00	B010100	B149999X	SEMICOND DEVICE:SILICON,VAR VCAP.,4V,33PF	80009	152-0269-00
CR496	152-0141-02	B010100	B149999X	SEMICOND DEVICE:SILICON,30V,150MA	80009	152-0141-02
CR530	152-0153-00	B010100	B149999X	SEMICOND DEVICE:SILICON,15V,50MA	80009	152-0153-00
CR531	152-0141-02			SEMICOND DEVICE:SILICON,30V,150MA	80009	152-0141-02
CR532	152-0141-02			SEMICOND DEVICE:SILICON,30V,150MA	80009	152-0141-02
CR533	152-0153-00			SEMICOND DEVICE:SILICON,15V,50MA	80009	152-0153-00
CR543	152-0141-02			SEMICOND DEVICE:SILICON,30V,150MA	80009	152-0141-02
CR544	152-0141-02			SEMICOND DEVICE:SILICON,30V,150MA	80009	152-0141-02
CR549	152-0153-00			SEMICOND DEVICE:SILICON,15V,50MA	80009	152-0153-00
CR621	152-0141-02			SEMICOND DEVICE:SILICON,30V,150MA	80009	152-0141-02
CR622	152-0141-02			SEMICOND DEVICE:SILICON,30V,150MA	80009	152-0141-02
CR635	152-0141-02			SEMICOND DEVICE:SILICON,30V,150MA	80009	152-0141-02
CR641	152-0141-02			SEMICOND DEVICE:SILICON,30V,150MA	80009	152-0141-02
CR672	152-0141-02			SEMICOND DEVICE:SILICON,30V,150MA	80009	152-0141-02
CR674	152-0141-02			SEMICOND DEVICE:SILICON,30V,150MA	80009	152-0141-02
CR676	152-0141-02			SEMICOND DEVICE:SILICON,30V,150MA	80009	152-0141-02
CR806	152-0488-00			SEMICOND DEVICE:SILICON,200V,1500MA	80009	152-0488-00
CR808	152-0488-00			SEMICOND DEVICE:SILICON,200V,1500MA	80009	152-0488-00
CR811	152-0406-00			SEMICOND DEVICE:SILICON,200V,3A	80009	152-0406-00
CR820	152-0423-00			SEMICOND DEVICE:SILICON,400V,3A	04713	1N5000
CR821	152-0423-00			SEMICOND DEVICE:SILICON,400V,3A	04713	1N5000
CR852	152-0141-02			SEMICOND DEVICE:SILICON,30V,150MA	80009	152-0141-02

Ckt No.	Tektronix Part No.	Serial/Model No. Eff	Dscont	Name & Description	Mfr Code	Mfr Part Number
CR861	152-0141-02			SEMICOND DEVICE:SILICON,30V,150MA	80009	152-0141-02
CR867	152-0061-00			SEMICOND DEVICE:SILICON,175V,100MA	80009	152-0061-00
CR868	152-0061-00			SEMICOND DEVICE:SILICON,175V,100MA	80009	152-0061-00
CR875	152-0066-00			SEMICOND DEVICE:SILICON,400V,750MA	80009	152-0066-00
CR883	152-0141-02			SEMICOND DEVICE:SILICON,30V,150MA	80009	152-0141-02
CR885	152-0141-02			SEMICOND DEVICE:SILICON,30V,150MA	80009	152-0141-02
CR888	152-0141-02			SEMICOND DEVICE:SILICON,30V,150MA	80009	152-0141-02
CR891	152-0141-02			SEMICOND DEVICE:SILICON,30V,150MA	80009	152-0141-02
CR894	152-0141-02			SEMICOND DEVICE:SILICON,30V,150MA	80009	152-0141-02
CR895	152-0141-02	XB270000		SEMICOND DEVICE:SILICON,30V,150MA	80009	152-0141-02
CR896	152-0141-02			SEMICOND DEVICE:SILICON,30V,150MA	80009	152-0141-02
CR903	152-0066-00			SEMICOND DEVICE:SILICON,400V,750MA	80009	152-0066-00
CR920	152-0141-02			SEMICOND DEVICE:SILICON,30V,150MA	80009	152-0141-02
CR924	152-0061-00			SEMICOND DEVICE:SILICON,175V,100MA	80009	152-0061-00
CR925	152-0061-00			SEMICOND DEVICE:SILICON,175V,100MA	80009	152-0061-00
CR935	152-0066-00			SEMICOND DEVICE:SILICON,400V,750MA	80009	152-0066-00
CR941	152-0141-02			SEMICOND DEVICE:SILICON,30V,150MA	80009	152-0141-02
CR950	152-0141-02			SEMICOND DEVICE:SILICON,30V,150MA	80009	152-0141-02
CR951	152-0141-02			SEMICOND DEVICE:SILICON,30V,150MA	80009	152-0141-02
CR952	152-0141-02			SEMICOND DEVICE:SILICON,30V,150MA	80009	152-0141-02
CR958	152-0066-00			SEMICOND DEVICE:SILICON,400V,750MA	80009	152-0066-00
CR961	152-0141-02			SEMICOND DEVICE:SILICON,30V,150MA	80009	152-0141-02
CR973	152-0061-00	XB060000		SEMICOND DEVICE:SILICON,175V,100MA	80009	152-0061-00
CR980	152-0141-02			SEMICOND DEVICE:SILICON,30V,150MA	80009	152-0141-02
CR981	152-0141-02			SEMICOND DEVICE:SILICON,30V,150MA	80009	152-0141-02
CR989	152-0066-00			SEMICOND DEVICE:SILICON,400V,750MA	80009	152-0066-00
CR1021	152-0141-02			SEMICOND DEVICE:SILICON,30V,150MA	80009	152-0141-02
CR1023	152-0141-02			SEMICOND DEVICE:SILICON,30V,150MA	80009	152-0141-02
CR1024	152-0141-02			SEMICOND DEVICE:SILICON,30V,150MA	80009	152-0141-02
CR1026	152-0141-02			SEMICOND DEVICE:SILICON,30V,150MA	80009	152-0141-02
CR1028	152-0141-02			SEMICOND DEVICE:SILICON,30V,150MA	80009	152-0141-02
CR1115	152-0153-00			SEMICOND DEVICE:SILICON,15V,50MA	80009	152-0153-00
CR1213	152-0409-00	XB360000		SEMICOND DEVICE:SILICON,12,000V,5MA	80009	152-0409-00
CR1215	152-0141-02	B010100	B359999X	SEMICOND DEVICE:SILICON,30V,150MA	80009	152-0141-02
CR1223	152-0141-02	XB360000		SEMICOND DEVICE:SILICON,30V,150MA	80009	152-0141-02
CR1226	152-0409-00	B010100	B359999X	SEMICOND DEVICE:SILICON,12,000V,5MA	80009	152-0409-00
CR1228	152-0409-00	B010100	B359999X	SEMICOND DEVICE:SILICON,12,000V,5MA	80009	152-0409-00
CR1232	152-0409-00	B010100	B359999X	SEMICOND DEVICE:SILICON,12,000V,5MA	80009	152-0409-00
CR1233	152-0242-00	XB360000		SEMICOND DEVICE:SILICON,225V,200MA	80009	152-0242-00
CR1234	152-0242-00	XB360000		SEMICOND DEVICE:SILICON,225V,200MA	80009	152-0242-00
CR1237	152-0242-00	XB360000		SEMICOND DEVICE:SILICON,225V,200MA	80009	152-0242-00
CR1239	152-0242-00	XB360000		SEMICOND DEVICE:SILICON,225V,200MA	80009	152-0242-00
CR1244	152-0141-02	B010100	B359999X	SEMICOND DEVICE:SILICON,30V,150MA	80009	152-0141-02
CR1251	152-0242-00	XB360000		SEMICOND DEVICE:SILICON,225V,200MA	80009	152-0242-00
CR1252	152-0586-00	XB360000		SEMICOND DEVICE:SILICON,600V,500MA	14936	RGP10J
CR1253	152-0242-00	B010100	B359999	SEMICOND DEVICE:SILICON,225V,200MA	80009	152-0242-00
CR1253	152-0586-00	B360000		SEMICOND DEVICE:SILICON,600V,500MA	14936	RGP10J
CR1254	152-0242-00			SEMICOND DEVICE:SILICON,225V,200MA	80009	152-0242-00
CR1255	152-0242-00	B010100	B359999X	SEMICOND DEVICE:SILICON,225V,200MA	80009	152-0242-00
CR1257	152-0242-00	XB360000		SEMICOND DEVICE:SILICON,225V,200MA	80009	152-0242-00
CR1258	152-0242-00	B010100	B359999X	SEMICOND DEVICE:SILICON,225V,200MA	80009	152-0242-00
CR1259	152-0242-00	XB360000		SEMICOND DEVICE:SILICON,225V,200MA	80009	152-0242-00
CR1264	152-0242-00	B010100	B359999X	SEMICOND DEVICE:SILICON,225V,200MA	80009	152-0242-00
CR1268	152-0242-00	B010100	B359999X	SEMICOND DEVICE:SILICON,225V,200MA	80009	152-0242-00
CR1269	152-0242-00	B010100	B359999X	SEMICOND DEVICE:SILICON,225V,200MA	80009	152-0242-00
CR1270	152-0242-00	B010100	B359999X	SEMICOND DEVICE:SILICON,225V,200MA	80009	152-0242-00
CR1287	152-0141-02	XB360000		SEMICOND DEVICE:SILICON,30V,150MA	80009	152-0141-02
CR1290	152-0141-02	XB360000		SEMICOND DEVICE:SILICON,30V,150MA	80009	152-0141-02
CR1291	152-0141-02	XB360000		SEMICOND DEVICE:SILICON,30V,150MA	80009	152-0141-02

Ckt No.	Tektronix Part No.	Serial/Model No. Eff	Dscont	Name & Description	Mfr Code	Mfr Part Number
CR1318	152-0141-02			SEMICOND DEVICE:SILICON,30V,150MA	80009	152-0141-02
CR1319	152-0141-02			SEMICOND DEVICE:SILICON,30V,150MA	80009	152-0141-02
CR1325	152-0141-02			SEMICOND DEVICE:SILICON,30V,150MA	80009	152-0141-02
CR1327	152-0141-02	B010100	B049999	SEMICOND DEVICE:SILICON,30V,150MA	80009	152-0141-02
CR1327	152-0242-00	B050000		SEMICOND DEVICE:SILICON,225V,200MA	80009	152-0242-00
CR1329	152-0141-02	B010100	B049999	SEMICOND DEVICE:SILICON,30V,150MA	80009	152-0141-02
CR1329	152-0242-00	B050000		SEMICOND DEVICE:SILICON,225V,200MA	80009	152-0242-00
CR1348	152-0141-02			SEMICOND DEVICE:SILICON,30V,150MA	80009	152-0141-02
CR1349	152-0141-02			SEMICOND DEVICE:SILICON,30V,150MA	80009	152-0141-02
CR1361	152-0141-02			SEMICOND DEVICE:SILICON,30V,150MA	80009	152-0141-02
CR1362	152-0141-02			SEMICOND DEVICE:SILICON,30V,150MA	80009	152-0141-02
CR1380	152-0141-02			SEMICOND DEVICE:SILICON,30V,150MA	80009	152-0141-02
CR1387	152-0141-02			SEMICOND DEVICE:SILICON,30V,150MA	80009	152-0141-02
CR1391	152-0141-02			SEMICOND DEVICE:SILICON,30V,150MA	80009	152-0141-02
CR1393	152-0141-02	B010100	B079999X	SEMICOND DEVICE:SILICON,30V,150MA	80009	152-0141-02
CR1394	152-0141-02			SEMICOND DEVICE:SILICON,30V,150MA	80009	152-0141-02
CR1395	152-0141-02			SEMICOND DEVICE:SILICON,30V,150MA	80009	152-0141-02
CR1396	152-0141-02	XB080000		SEMICOND DEVICE:SILICON,30V,150MA	80009	152-0141-02
CR1398	152-0141-02			SEMICOND DEVICE:SILICON,30V,150MA	80009	152-0141-02
CR1399	152-0141-02			SEMICOND DEVICE:SILICON,30V,150MA	80009	152-0141-02
CR1406	152-0141-02			SEMICOND DEVICE:SILICON,30V,150MA	80009	152-0141-02
CR1408	152-0141-02			SEMICOND DEVICE:SILICON,30V,150MA	80009	152-0141-02
CR1410	152-0141-02	XB080000		SEMICOND DEVICE:SILICON,30V,150MA	80009	152-0141-02
CR1412	152-0141-02	XB080000		SEMICOND DEVICE:SILICON,30V,150MA	80009	152-0141-02
CR1414	152-0141-02	XB080000		SEMICOND DEVICE:SILICON,30V,150MA	80009	152-0141-02
CR1418	152-0141-02			SEMICOND DEVICE:SILICON,30V,150MA	80009	152-0141-02
CR1419	152-0141-02			SEMICOND DEVICE:SILICON,30V,150MA	80009	152-0141-02
CR1424	152-0129-00			SEMICOND DEVICE:GERMANIUM,10V,23UA	73445	1N87A
CR1430	152-0141-02			SEMICOND DEVICE:SILICON,30V,150MA	80009	152-0141-02
CR1431	152-0141-02			SEMICOND DEVICE:SILICON,30V,150MA	80009	152-0141-02
CR1434	152-0141-02			SEMICOND DEVICE:SILICON,30V,150MA	80009	152-0141-02
CR1442	152-0141-02			SEMICOND DEVICE:SILICON,30V,150MA	80009	152-0141-02
CR1448	152-0141-02			SEMICOND DEVICE:SILICON,30V,150MA	80009	152-0141-02
CR1454	152-0141-02			SEMICOND DEVICE:SILICON,30V,150MA	80009	152-0141-02
CR1456	152-0141-02			SEMICOND DEVICE:SILICON,30V,150MA	80009	152-0141-02
CR1462	152-0141-02	XB050000		SEMICOND DEVICE:SILICON,30V,150MA	80009	152-0141-02
CR1469	152-0141-02			SEMICOND DEVICE:SILICON,30V,150MA	80009	152-0141-02
CR1470	152-0141-02			SEMICOND DEVICE:SILICON,30V,150MA	80009	152-0141-02
CR1475	152-0141-02			SEMICOND DEVICE:SILICON,30V,150MA	80009	152-0141-02
CR1480	152-0141-02			SEMICOND DEVICE:SILICON,30V,150MA	80009	152-0141-02
CR1482	152-0141-02			SEMICOND DEVICE:SILICON,30V,150MA	80009	152-0141-02
CR1490	152-0141-02			SEMICOND DEVICE:SILICON,30V,150MA	80009	152-0141-02
CR1492	152-0141-02			SEMICOND DEVICE:SILICON,30V,150MA	80009	152-0141-02
CR1493	152-0141-02	XB080000		SEMICOND DEVICE:SILICON,30V,150MA	80009	152-0141-02
CR1495	152-0141-02			SEMICOND DEVICE:SILICON,30V,150MA	80009	152-0141-02
CR1503	152-0141-02			SEMICOND DEVICE:SILICON,30V,150MA	80009	152-0141-02
CR1513	152-0141-02			SEMICOND DEVICE:SILICON,30V,150MA	80009	152-0141-02
CR1525	152-0141-02			SEMICOND DEVICE:SILICON,30V,150MA	80009	152-0141-02
CR1534	152-0141-02			SEMICOND DEVICE:SILICON,30V,150MA	80009	152-0141-02
CR1535	152-0141-02			SEMICOND DEVICE:SILICON,30V,150MA	80009	152-0141-02
CR1537	152-0141-02			SEMICOND DEVICE:SILICON,30V,150MA	80009	152-0141-02
CR1538	152-0141-02			SEMICOND DEVICE:SILICON,30V,150MA	80009	152-0141-02
CR2124	152-0141-02			SEMICOND DEVICE:SILICON,30V,150MA	80009	152-0141-02
CR2125	152-0141-02			SEMICOND DEVICE:SILICON,30V,150MA	80009	152-0141-02
CR2127	152-0141-02			SEMICOND DEVICE:SILICON,30V,150MA	80009	152-0141-02
CR2140	152-0141-02			SEMICOND DEVICE:SILICON,30V,150MA	80009	152-0141-02
CR2141	152-0141-02			SEMICOND DEVICE:SILICON,30V,150MA	80009	152-0141-02
CR2142	152-0141-02			SEMICOND DEVICE:SILICON,30V,150MA	80009	152-0141-02
CR2145	152-0141-02			SEMICOND DEVICE:SILICON,30V,150MA	80009	152-0141-02

Ckt No.	Tektronix Part No.	Serial/Model No. Eff	Dscont	Name & Description	Mfr Code	Mfr Part Number
CR2146	152-0141-02			SEMICOND DEVICE:SILICON,30V,150MA	80009	152-0141-02
CR2156	152-0141-02			SEMICOND DEVICE:SILICON,30V,150MA	80009	152-0141-02
CR2157	152-0141-02			SEMICOND DEVICE:SILICON,30V,150MA	80009	152-0141-02
CR2162	152-0141-02			SEMICOND DEVICE:SILICON,30V,150MA	80009	152-0141-02
CR2163	152-0141-02			SEMICOND DEVICE:SILICON,30V,150MA	80009	152-0141-02
CR2166	152-0141-02			SEMICOND DEVICE:SILICON,30V,150MA	80009	152-0141-02
CR2167	152-0141-02			SEMICOND DEVICE:SILICON,30V,150MA	80009	152-0141-02
CR2170	152-0141-02			SEMICOND DEVICE:SILICON,30V,150MA	80009	152-0141-02
CR2171	152-0141-02			SEMICOND DEVICE:SILICON,30V,150MA	80009	152-0141-02
CR2174	152-0141-02			SEMICOND DEVICE:SILICON,30V,150MA	80009	152-0141-02
CR2175	152-0141-02			SEMICOND DEVICE:SILICON,30V,150MA	80009	152-0141-02
CR2192	152-0141-02			SEMICOND DEVICE:SILICON,30V,150MA	80009	152-0141-02
CR2193	152-0141-02			SEMICOND DEVICE:SILICON,30V,150MA	80009	152-0141-02
CR2196	152-0141-02			SEMICOND DEVICE:SILICON,30V,150MA	80009	152-0141-02
CR2198	152-0141-02			SEMICOND DEVICE:SILICON,30V,150MA	80009	152-0141-02
CR2226	152-0141-02			SEMICOND DEVICE:SILICON,30V,150MA	80009	152-0141-02
CR2235	152-0333-00	XB300000		SEMICOND DEVICE:SILICON,55V,200MA	80009	152-0333-00
THRU						
CR2266						
CR2331	152-0141-02	XB150000		SEMICOND DEVICE:SILICON,30V,150MA	80009	152-0141-02
CR2414	152-0612-00	XB150000		SEMICOND DEVICE:V VAR CAP.,4V,17.5PF	80009	152-0612-00
CR2456	152-0612-00	XB150000		SEMICOND DEVICE:V VAR CAP.,4V,17.5PF	80009	152-0612-00
CR2514	152-0612-00	XB150000		SEMICOND DEVICE:V VAR CAP.,4V,17.5PF	80009	152-0612-00
CR2556	152-0612-00	XB150000		SEMICOND DEVICE:V VAR CAP.,4V,17.5PF	80009	152-0612-00
DL400	119-0368-00			DELAY LINE,ELEC:	80009	119-0368-00
DS1001	150-0121-02			LAMP,CARTRIDGE:GREEN,5V,60MA	80009	150-0121-02
DS1090	150-0029-00			LAMP,INCAND:6.3V,0.20A	08806	349
DS1091	150-0029-00			LAMP,INCAND:6.3V,0.20A	08806	349
DS1092	150-0029-00			LAMP,INCAND:6.3V,0.20A	08806	349
DS1260	150-0030-00	XB360000		LAMP,GLOW:NEON,T-2,60 TO 90 VOLTS	08806	A2B-T
DS1261	150-0030-00	XB360000		LAMP,GLOW:NEON,T-2,60 TO 90 VOLTS	08806	A2B-T
DS1262	150-0030-00	XB360000		LAMP,GLOW:NEON,T-2,60 TO 90 VOLTS	08806	A2B-T
DS1263	150-0030-00	XB360000		LAMP,GLOW:NEON,T-2,60 TO 90 VOLTS	08806	A2B-T
F814	159-0021-00			FUSE,CARTRIDGE:3AG,2A,250V,FAST-BLOW	71400	AGC 2
F855	159-0083-00			FUSE,CARTRIDGE:0.15A,250V,FAST-BLOW	71400	AGC 15/100
F1000	159-0026-00			FUSE,CARTRIDGE:3AG,3.2A,125V,SLOW-BLOW	71400	MDX 3 2/10
J1	131-0767-02	B010100	B039999	CONNECTOR,RCPT,:76 CONTACT	80009	131-0767-02
J1	131-0767-08	B040000		CONNECTOR,RCPT,:PLUG-IN CKT BD,70 CONTACT	80009	131-0767-08
J2	131-0767-02	B010100	B039999	CONNECTOR,RCPT,:76 CONTACT	80009	131-0767-02
J2	131-0767-08	B040000		CONNECTOR,RCPT,:PLUG-IN CKT BD,70 CONTACT	80009	131-0767-08
J3	131-0767-00	B010100	B039999	CONNECTOR,RCPT,:76 CONTACT	80009	131-0767-00
J3	131-0767-07	B040000		CONNECTOR,RCPT,:PLUG-IN CKT BD,70 CONTACT	80009	131-0767-07
J26	131-1003-00			CONNECTOR BODY,:CKT BD MT,2 PRONG	80009	131-1003-00
J27	131-1003-00			CONNECTOR BODY,:CKT BD MT,2 PRONG	80009	131-1003-00
J401	131-1003-00	B010100	B149999X	CONNECTOR BODY,:CKT BD MT,2 PRONG	80009	131-1003-00
J409	131-1003-00	B010100	B149999X	CONNECTOR BODY,:CKT BD MT,2 PRONG	80009	131-1003-00
J431	131-1003-00	B010100	B149999X	CONNECTOR BODY,:CKT BD MT,2 PRONG	80009	131-1003-00
J503	131-1003-00			CONNECTOR BODY,:CKT BD MT,2 PRONG	80009	131-1003-00
J508	131-1003-00			CONNECTOR BODY,:CKT BD MT,2 PRONG	80009	131-1003-00
J601	131-1003-00			CONNECTOR BODY,:CKT BD MT,2 PRONG	80009	131-1003-00
J603	131-1003-00			CONNECTOR BODY,:CKT BD MT,2 PRONG	80009	131-1003-00
J629	131-0955-00			CONNECTOR,RCPT,:BNC,FEMALE,W/HARDWARE	13511	31-279
J649	131-0955-00			CONNECTOR,RCPT,:BNC,FEMALE,W/HARDWARE	13511	31-279
J679	131-0955-00			CONNECTOR,RCPT,:BNC,FEMALE,W/HARDWARE	13511	31-279
J1047	131-0955-00			CONNECTOR,RCPT,:BNC,FEMALE,W/HARDWARE	13511	31-279
J1049	131-0955-00			CONNECTOR,RCPT,:BNC,FEMALE,W/HARDWARE	13511	31-279

Ckt No.	Tektronix Part No.	Serial/Model No. Eff	Dscont	Name & Description	Mfr Code	Mfr Part Number
J1050	131-0955-00			CONNECTOR,RCPT,:BNC,FEMALE,W/HARDWARE	13511	31-279
J1132	131-1003-00			CONNECTOR BODY,:CKT BD MT,2 PRONG	80009	131-1003-00
J2132	131-1003-00			CONNECTOR BODY,:CKT BD MT,2 PRONG	80009	131-1003-00
J2138	131-1003-00			CONNECTOR BODY,:CKT BD MT,2 PRONG	80009	131-1003-00
J2139	131-1003-00			CONNECTOR BODY,:CKT BD MT,2 PRONG	80009	131-1003-00
J2192	131-1003-00			CONNECTOR BODY,:CKT BD MT,2 PRONG	80009	131-1003-00
J2296	131-1003-00			CONNECTOR BODY,:CKT BD MT,2 PRONG	80009	131-1003-00
J2299	131-1003-00			CONNECTOR BODY,:CKT BD MT,2 PRONG	80009	131-1003-00
J2401	131-1003-00	XB150000		CONNECTOR BODY,:CKT BD MT,2 PRONG	80009	131-1003-00
J2501	131-1003-00	XB150000		CONNECTOR BODY,:CKT BD MT,2 PRONG	80009	131-1003-00
J2534	131-1003-00	XB150000		CONNECTOR BODY,:CKT BD MT,2 PRONG	80009	131-1003-00
L425	108-0707-00	B010100	B149999X	COIL,RF:150NH	80009	108-0707-00
L474	114-0330-00	B010100	B149999X	TRANSFORMER,RF:0.8-2.0UH	80009	114-0330-00
L478	114-0330-00	B010100	B149999X	TRANSFORMER,RF:0.8-2.0UH	80009	114-0330-00
L1098	108-0605-00			COIL,TUBE DEFLE:Y AXIS ALIGNMENT	80009	108-0605-00
L1099	119-0368-00			DELAY LINE,ELEC:	80009	119-0368-00
L1222	108-0646-00	B010100	B359999X	COIL,RF:80UH	80009	108-0646-00
L1298	108-0646-00	XB360000		COIL,RF:80UH	80009	108-0646-00
L2283	108-0331-00			COIL,RF:0.75UH	80009	108-0331-00
L2386	108-0606-00	XB150000		COIL,RF:50NH	80009	108-0606-00
L2396	108-0606-00	XB150000		COIL,RF:50NH	80009	108-0606-00
L2441	276-0528-00	XB150000		SHIELDING BEAD,:0.1UH	02114	56-0590-65C/3B
L2448	108-0579-00	XB150000		TRANSFORMER,RF:120NH	80009	108-0579-00
L2519	108-0707-00	XB150000		COIL,RF:150NH	80009	108-0707-00
L2541	276-0528-00	XB150000		SHIELDING BEAD,:0.1UH	02114	56-0590-65C/3B
L2548	108-0579-00	XB150000		TRANSFORMER,RF:120NH	80009	108-0579-00
L2595	108-0538-00	XB150000		COIL,RF:2.7UH	76493	70F276A1
LR55	108-0245-00	XB210000		COIL,RF:3.9UH	80009	108-0245-00
LR193	108-0604-00	B010100	B209999	COIL,RF:3.2UH	80009	108-0604-00
LR193	108-0245-00	B210000		COIL,RF:3.9UH	80009	108-0245-00
LR195	108-0604-00	B010100	B209999	COIL,RF:3.2UH	80009	108-0604-00
LR195	108-0245-00	B210000		COIL,RF:3.9UH	80009	108-0245-00
LR198	108-0604-00	B010100	B209999	COIL,RF:3.2UH	80009	108-0604-00
LR198	108-0245-00	B210000		COIL,RF:3.9UH	80009	108-0245-00
LR482	108-0331-00	B010100	B149999X	COIL,RF:0.75UH	80009	108-0331-00
LR2472	108-0777-00	XB150000		COIL,RF:100NH	80009	108-0777-00
LR2572	108-0777-00	XB150000		COIL,RF:100NH	80009	108-0777-00
P60	131-0589-00	XB240000		TERM,PIN:0.46 L X 0.025 SQ.PH BRZ GL	22526	47350
Q90A,B	151-0232-00			TRANSISTOR:SILICON,NPN,DUAL	80009	151-0232-00
Q108	151-0199-00			TRANSISTOR:SILICON,PNP	80009	151-0199-00
Q132	151-0199-00			TRANSISTOR:SILICON,PNP	80009	151-0199-00
Q137	151-0223-00			TRANSISTOR:SILICON,NPN	80009	151-0223-00
Q142	151-0199-00			TRANSISTOR:SILICON,PNP	80009	151-0199-00
Q147	151-0223-00			TRANSISTOR:SILICON,NPN	80009	151-0223-00
Q150	151-0223-00			TRANSISTOR:SILICON,NPN	80009	151-0223-00
Q162	151-0199-00			TRANSISTOR:SILICON,PNP	80009	151-0199-00
Q167	151-0223-00			TRANSISTOR:SILICON,NPN	80009	151-0223-00
Q236A,B	151-0232-00	B010100	B149999X	TRANSISTOR:SILICON,NPN,DUAL	80009	151-0232-00
Q238	151-0190-00	B010100	B149999X	TRANSISTOR:SILICON,NPN	80009	151-0190-00
Q242	151-0221-00	B010100	B149999X	TRANSISTOR:SILICON,PNP	80009	151-0221-00
Q252	151-0221-00	B010100	B149999X	TRANSISTOR:SILICON,PNP	80009	151-0221-00
Q314	151-0190-00			TRANSISTOR:SILICON,NPN	80009	151-0190-00
Q334	151-0190-00			TRANSISTOR:SILICON,NPN	80009	151-0190-00
Q336	151-0190-00			TRANSISTOR:SILICON,NPN	80009	151-0190-00
Q344	151-0221-00			TRANSISTOR:SILICON,PNP	80009	151-0221-00
Q346	151-0221-00			TRANSISTOR:SILICON,PNP	80009	151-0221-00
Q407	151-0301-00	B010100	B149999X	TRANSISTOR:SILICON,PNP	04713	2N2907A

Ckt No.	Tektronix Part No.	Serial/Model No. Eff	Dscont	Name & Description	Mfr Code	Mfr Part Number
Q415	151-0301-00	B010100	B149999X	TRANSISTOR:SILICON,PNP	04713	2N2907A
Q496	151-0190-00	B010100	B149999X	TRANSISTOR:SILICON,NPN	80009	151-0190-00
Q539	151-0220-00			TRANSISTOR:SILICON,PNP	80009	151-0220-00
Q547	151-0220-00			TRANSISTOR:SILICON,PNP	80009	151-0220-00
Q551	151-0103-00			TRANSISTOR:SILICON,NPN	80009	151-0103-00
Q553	151-0103-00			TRANSISTOR:SILICON,NPN	80009	151-0103-00
Q558	151-0270-00	B010100	B019999	TRANSISTOR:SILICON,PNP	80009	151-0270-00
Q558	151-0406-00	B020000		TRANSISTOR:SILICON,PNP	80009	151-0406-00
Q560	151-0347-00	B010100	B365108	TRANSISTOR:SILICON,NPN	80009	151-0347-00
Q560	151-0347-01	B365109		TRANSISTOR:SILICON,NPN,PRESTRESSED	80009	151-0347-01
Q578	151-0270-00	B010100	B019999	TRANSISTOR:SILICON,PNP	80009	151-0270-00
Q578	151-0406-00	B020000		TRANSISTOR:SILICON,PNP	80009	151-0406-00
Q580	151-0347-00	B010100	B365108	TRANSISTOR:SILICON,NPN	80009	151-0347-00
Q580	151-0347-01	B365109		TRANSISTOR:SILICON,NPN,PRESTRESSED	80009	151-0347-01
Q606	151-0221-00			TRANSISTOR:SILICON,PNP	80009	151-0221-00
Q618	151-0221-00			TRANSISTOR:SILICON,PNP	80009	151-0221-00
Q620	151-0220-00	B010100	B299999	TRANSISTOR:SILICON,PNP	80009	151-0220-00
Q620	151-0221-00	B300000		TRANSISTOR:SILICON,PNP	80009	151-0221-00
Q631	151-0190-00			TRANSISTOR:SILICON,NPN	80009	151-0190-00
Q634	151-0190-00			TRANSISTOR:SILICON,NPN	80009	151-0190-00
Q640	151-0220-00			TRANSISTOR:SILICON,PNP	80009	151-0220-00
Q662	151-0190-00			TRANSISTOR:SILICON,NPN	80009	151-0190-00
Q666	151-0190-00			TRANSISTOR:SILICON,NPN	80009	151-0190-00
Q672	151-0188-00			TRANSISTOR:SILICON,PNP	80009	151-0188-00
Q827	151-0223-00			TRANSISTOR:SILICON,NPN	80009	151-0223-00
Q829	151-0223-00			TRANSISTOR:SILICON,NPN	80009	151-0223-00
Q835	151-0334-00			TRANSISTOR:SILICON,NPN	80009	151-0334-00
Q850	151-0337-00			TRANSISTOR:SILICON,NPN	80009	151-0337-00
Q852	151-0276-00			TRANSISTOR:SILICON,PNP	80009	151-0276-00
Q860	151-0347-00			TRANSISTOR:SILICON,NPN	80009	151-0347-00
Q863	151-0347-00			TRANSISTOR:SILICON,NPN	80009	151-0347-00
Q869	151-0347-00			TRANSISTOR:SILICON,NPN	80009	151-0347-00
Q872	151-0279-00	B010100	B329999	TRANSISTOR:SILICON,NPN	80009	151-0279-00
Q872	151-0407-00	B330000		TRANSISTOR:SILICON,NPN	80009	151-0407-00
Q874	151-0336-00	B010100	B259999	TRANSISTOR:SILICON,NPN	80009	151-0336-00
Q874	151-0487-00	B260000		TRANSISTOR:SILICON,NPN,SEL FROM 2N3773	80009	151-0487-00
Q876A,B	151-0232-00			TRANSISTOR:SILICON,NPN,DUAL	80009	151-0232-00
Q886A,B	151-0232-00			TRANSISTOR:SILICON,NPN,DUAL	80009	151-0232-00
Q896	151-0228-00			TRANSISTOR:SILICON,PNP,SEL FROM 2N4888	80009	151-0228-00
Q900	151-0347-00			TRANSISTOR:SILICON,NPN	80009	151-0347-00
Q903	151-0336-00	B010100	B259999	TRANSISTOR:SILICON,NPN	80009	151-0336-00
Q903	151-0487-00	B260000		TRANSISTOR:SILICON,NPN,SEL FROM 2N3773	80009	151-0487-00
Q908	151-0292-00			TRANSISTOR:SILICON,NPN	80009	151-0292-00
Q909	151-0292-00			TRANSISTOR:SILICON,NPN	80009	151-0292-00
Q910	151-0292-00			TRANSISTOR:SILICON,NPN	80009	151-0292-00
Q919A,B	151-0232-00			TRANSISTOR:SILICON,NPN,DUAL	80009	151-0232-00
Q926	151-0347-00			TRANSISTOR:SILICON,NPN	80009	151-0347-00
Q931	151-0260-02			TRANSISTOR:SILICON,NPN	80009	151-0260-02
Q933	151-0337-00	B010100	B259999	TRANSISTOR:SILICON,NPN	80009	151-0337-00
Q933	151-0487-00	B260000		TRANSISTOR:SILICON,NPN,SEL FROM 2N3773	80009	151-0487-00
Q936A,B	151-0232-00			TRANSISTOR:SILICON,NPN,DUAL	80009	151-0232-00
Q943A,B	151-0232-00			TRANSISTOR:SILICON,NPN,DUAL	80009	151-0232-00
Q952	151-0134-00			TRANSISTOR:SILICON,PNP	80009	151-0134-00
Q956	151-0260-02			TRANSISTOR:SILICON,NPN	80009	151-0260-02
Q958	151-0337-00	B010100	B259999	TRANSISTOR:SILICON,NPN	80009	151-0337-00
Q958	151-0487-00	B260000		TRANSISTOR:SILICON,NPN,SEL FROM 2N3773	80009	151-0487-00
Q964A,B	151-0232-00			TRANSISTOR:SILICON,NPN,DUAL	80009	151-0232-00
Q985	151-0136-00			TRANSISTOR:SILICON,NPN	80009	151-0136-00
Q988	151-0337-00			TRANSISTOR:SILICON,NPN	80009	151-0337-00

Ckt No.	Tektronix Part No.	Serial/Model No. Eff	Dscont	Name & Description	Mfr Code	Mfr Part Number
Q1061	151-0224-00			TRANSISTOR:SILICON,NPN	80009	151-0224-00
Q1066	151-0224-00			TRANSISTOR:SILICON,NPN	80009	151-0224-00
Q1070	151-0220-00			TRANSISTOR:SILICON,PNP	80009	151-0220-00
Q1072	151-0220-00			TRANSISTOR:SILICON,PNP	80009	151-0220-00
Q1107	151-0190-00			TRANSISTOR:SILICON,NPN	80009	151-0190-00
Q1110	151-0188-00			TRANSISTOR:SILICON,PNP	80009	151-0188-00
Q1118	151-0188-00			TRANSISTOR:SILICON,PNP	80009	151-0188-00
Q1128	151-0188-00			TRANSISTOR:SILICON,PNP	80009	151-0188-00
Q1132	151-0270-00	B010100	B019999	TRANSISTOR:SILICON,PNP	80009	151-0270-00
Q1132	151-0406-00	B020000		TRANSISTOR:SILICON,PNP	80009	151-0406-00
Q1134	151-0250-00	B010100	B019999	TRANSISTOR:SILICON,NPN	80009	151-0250-00
Q1134	151-0347-00	B020000		TRANSISTOR:SILICON,NPN	80009	151-0347-00
Q1136	151-0223-00			TRANSISTOR:SILICON,NPN	80009	151-0223-00
Q1148	151-0188-00			TRANSISTOR:SILICON,PNP	80009	151-0188-00
Q1152	151-0270-00	B010100	B019999	TRANSISTOR:SILICON,PNP	80009	151-0270-00
Q1152	151-0406-00	B020000		TRANSISTOR:SILICON,PNP	80009	151-0406-00
Q1154	151-0250-00	B010100	B019999	TRANSISTOR:SILICON,NPN	80009	151-0250-00
Q1154	151-0347-00	B020000		TRANSISTOR:SILICON,NPN	80009	151-0347-00
Q1156	151-0223-00	B010100	B019999	TRANSISTOR:SILICON,NPN	80009	151-0223-00
Q1156	151-0195-00	B020000		TRANSISTOR:SILICON,NPN	80009	151-0195-00
Q1201	151-0126-00	B010100	B359999X	TRANSISTOR:SILICON,NPN	80009	151-0126-00
Q1206	151-0188-00	B010100	B359999X	TRANSISTOR:SILICON,PNP	80009	151-0188-00
Q1214	151-0136-00	B010100	B359999X	TRANSISTOR:SILICON,NPN	80009	151-0136-00
Q1216	151-0140-00	B010100	B089999	TRANSISTOR:SILICON,NPN	80009	151-0140-00
Q1216	151-0140-01	B090000	B159999	TRANSISTOR:SILICON,NPN	80009	151-0140-01
Q1216	151-0140-00	B160000		TRANSISTOR:SILICON,NPN	80009	151-0140-00
Q1218	151-0140-00	B010100	B089999	TRANSISTOR:SILICON,NPN	80009	151-0140-00
Q1218	151-0140-01	B090000	B159999	TRANSISTOR:SILICON,NPN	80009	151-0140-01
Q1218	151-0140-00	B160000	B359999X	TRANSISTOR:SILICON,NPN	80009	151-0140-00
Q1284	151-0126-00	XB360000		TRANSISTOR:SILICON,NPN	80009	151-0126-00
Q1287	151-0188-00	XB360000		TRANSISTOR:SILICON,PNP	80009	151-0188-00
Q1290	151-0136-00	XB360000		TRANSISTOR:SILICON,NPN	80009	151-0136-00
Q1329	151-0188-00			TRANSISTOR:SILICON,PNP	80009	151-0188-00
Q1331	151-0190-00			TRANSISTOR:SILICON,NPN	80009	151-0190-00
Q1336	151-0190-00			TRANSISTOR:SILICON,NPN	80009	151-0190-00
Q1340	151-0190-00			TRANSISTOR:SILICON,NPN	80009	151-0190-00
Q1345	151-0190-00			TRANSISTOR:SILICON,NPN	80009	151-0190-00
Q1352	151-0190-00			TRANSISTOR:SILICON,NPN	80009	151-0190-00
Q1357	151-0190-00			TRANSISTOR:SILICON,NPN	80009	151-0190-00
Q1365	151-0190-00			TRANSISTOR:SILICON,NPN	80009	151-0190-00
Q1369	151-0190-00			TRANSISTOR:SILICON,NPN	80009	151-0190-00
Q1373	151-0190-00			TRANSISTOR:SILICON,NPN	80009	151-0190-00
Q1378	151-0190-00			TRANSISTOR:SILICON,NPN	80009	151-0190-00
Q1380	151-0195-00			TRANSISTOR:SILICON,NPN	80009	151-0195-00
Q1387	151-0195-00			TRANSISTOR:SILICON,NPN	80009	151-0195-00
Q1395	151-0188-00			TRANSISTOR:SILICON,PNP	80009	151-0188-00
Q1401	151-0508-00			TRANSISTOR:SILICON,NPN,PROGRAMMABLE	03508	2N6027
Q1409	151-0126-00			TRANSISTOR:SILICON,NPN	80009	151-0126-00
Q1411	151-0188-00			TRANSISTOR:SILICON,PNP	80009	151-0188-00
Q1414	151-0190-00			TRANSISTOR:SILICON,NPN	80009	151-0190-00
Q1423	151-0190-00			TRANSISTOR:SILICON,NPN	80009	151-0190-00
Q1425	151-0347-00			TRANSISTOR:SILICON,NPN	80009	151-0347-00
Q1432	151-0190-00			TRANSISTOR:SILICON,NPN	80009	151-0190-00
Q1443	151-0190-00			TRANSISTOR:SILICON,NPN	80009	151-0190-00
Q1448	151-0347-00			TRANSISTOR:SILICON,NPN	80009	151-0347-00
Q1449	151-0292-00			TRANSISTOR:SILICON,NPN	80009	151-0292-00
Q1453	151-0190-00			TRANSISTOR:SILICON,NPN	80009	151-0190-00
Q1458	151-0190-00			TRANSISTOR:SILICON,NPN	80009	151-0190-00
Q1462	151-0190-00			TRANSISTOR:SILICON,NPN	80009	151-0190-00

Ckt No.	Tektronix Part No.	Serial/Model No. Eff	Dscont	Name & Description	Mfr Code	Mfr Part Number
Q1467	151-0190-00			TRANSISTOR:SILICON,NPN	80009	151-0190-00
Q1482	151-0190-00			TRANSISTOR:SILICON,NPN	80009	151-0190-00
Q1494	151-0342-00			TRANSISTOR:SILICON,PNP	80009	151-0342-00
Q1498	151-0342-00			TRANSISTOR:SILICON,PNP	80009	151-0342-00
Q1502	151-0292-00			TRANSISTOR:SILICON,NPN	80009	151-0292-00
Q1505	151-0292-00			TRANSISTOR:SILICON,NPN	80009	151-0292-00
Q1512	151-0347-00			TRANSISTOR:SILICON,NPN	80009	151-0347-00
Q1524	151-0347-00			TRANSISTOR:SILICON,NPN	80009	151-0347-00
Q1538	151-0347-00			TRANSISTOR:SILICON,NPN	80009	151-0347-00
Q1539	151-0292-00			TRANSISTOR:SILICON,NPN	80009	151-0292-00
Q2108	151-0223-00			TRANSISTOR:SILICON,NPN	80009	151-0223-00
Q2112	151-0221-00			TRANSISTOR:SILICON,PNP	80009	151-0221-00
Q2138	151-0188-00			TRANSISTOR:SILICON,PNP	80009	151-0188-00
Q2153	151-0192-00			TRANSISTOR:SILICON,NPN,SEL FROM MPS6521	80009	151-0192-00
Q2159	151-0190-00			TRANSISTOR:SILICON,NPN	80009	151-0190-00
Q2215A,B	151-0232-00			TRANSISTOR:SILICON,NPN,DUAL	80009	151-0232-00
Q2223	151-0190-00			TRANSISTOR:SILICON,NPN	80009	151-0190-00
Q2225	151-0188-00			TRANSISTOR:SILICON,PNP	80009	151-0188-00
Q2229	151-0190-00			TRANSISTOR:SILICON,NPN	80009	151-0190-00
Q2240	151-0190-00			TRANSISTOR:SILICON,NPN	80009	151-0190-00
Q2286	151-0188-00			TRANSISTOR:SILICON,PNP	80009	151-0188-00
Q2287	151-0188-00			TRANSISTOR:SILICON,PNP	80009	151-0188-00
Q2296	151-0188-00			TRANSISTOR:SILICON,PNP	80009	151-0188-00
Q2299	151-0188-00			TRANSISTOR:SILICON,PNP	80009	151-0188-00
Q2365A,B	151-0232-00	XB150000		TRANSISTOR:SILICON,NPN,DUAL	80009	151-0232-00
Q2386	151-0447-00	XB150000		TRANSISTOR:SILICON,NPN	80009	151-0447-00
Q2390	151-0190-00	XB150000		TRANSISTOR:SILICON,NPN	80009	151-0190-00
Q2396	151-0447-00	XB150000		TRANSISTOR:SILICON,NPN	80009	151-0447-00
Q2404	151-0447-00	XB150000		TRANSISTOR:SILICON,NPN	80009	151-0447-00
Q2423	151-0302-00	XB150000		TRANSISTOR:SILICON,NPN	80009	151-0302-00
Q2427	151-0302-00	XB150000		TRANSISTOR:SILICON,NPN	80009	151-0302-00
Q2430	151-0192-00	XB150000		TRANSISTOR:SILICON,NPN,SEL FROM MPS6521	80009	151-0192-00
Q2441	151-0271-00	XB150000		TRANSISTOR:SILICON,PNP	80009	151-0271-00
Q2455	151-0448-00	XB150000		TRANSISTOR:SILICON,NPN	80009	151-0448-00
Q2468	151-0451-00	XB150000		TRANSISTOR:SILICON,NPN	80009	151-0451-00
Q2505	151-0447-00	XB150000		TRANSISTOR:SILICON,NPN	80009	151-0447-00
Q2530	151-0192-00	XB150000		TRANSISTOR:SILICON,NPN,SEL FROM MPS6521	80009	151-0192-00
Q2541	151-0271-00	XB150000		TRANSISTOR:SILICON,PNP	80009	151-0271-00
Q2552	151-0301-00	XB150000		TRANSISTOR:SILICON,PNP	04713	2N2907A
Q2555	151-0448-00	XB150000		TRANSISTOR:SILICON,NPN	80009	151-0448-00
Q2568	151-0451-00	XB150000		TRANSISTOR:SILICON,NPN	80009	151-0451-00
R12	321-0260-00			RES.,FXD,FILM:4.99K OHM,1%,0.125W	91637	MFF1816G49900F
R14	321-0260-00			RES.,FXD,FILM:4.99K OHM,1%,0.125W	91637	MFF1816G49900F
R20	315-0103-00			RES.,FXD,CMPSN:10K OHM,5%,0.25W	01121	CB1035
R21	315-0103-00			RES.,FXD,CMPSN:10K OHM,5%,0.25W	01121	CB1035
R26	315-0122-00	XB240000		RES.,FXD,CMPSN:1.2K OHM,5%,0.25W	01121	CB1225
R28	315-0510-00			RES.,FXD,CMPSN:51 OHM,5%,0.25W	01121	CB5105
R29	315-0510-00			RES.,FXD,CMPSN:51 OHM,5%,0.25W	01121	CB5105
R31	315-0122-00			RES.,FXD,CMPSN:1.2K OHM,5%,0.25W	01121	CB1225
R33	315-0682-00			RES.,FXD,CMPSN:6.8K OHM,5%,0.25W	01121	CB6825
R34	315-0122-00			RES.,FXD,CMPSN:1.2K OHM,5%,0.25W	01121	CB1225
R35	315-0122-00			RES.,FXD,CMPSN:1.2K OHM,5%,0.25W	01121	CB1225
R36	321-0231-00			RES.,FXD,FILM:2.49K OHM,1%,0.125W	91637	MFF1816G24900F
R37	315-0152-00	XB240000		RES.,FXD,CMPSN:1.5K OHM,5%,0.25W	01121	CB1525
R38	315-0152-00			RES.,FXD,CMPSN:1.5K OHM,5%,0.25W	01121	CB1525
R39	315-0152-00			RES.,FXD,CMPSN:1.5K OHM,5%,0.25W	01121	CB1525
R42	315-0105-00			RES.,FXD,CMPSN:1M OHM,5%,0.25W	01121	CB1055
R44	315-0334-00	B010100	B239999	RES.,FXD,CMPSN:330K OHM,5%,0.25W	01121	CB3345
R44	315-0152-00	B240000		RES.,FXD,CMPSN:1.5K OHM,5%,0.25W	01121	CB1525

Ckt No.	Tektronix Part No.	Serial/Model No. Eff	Dscont	Name & Description	Mfr Code	Mfr Part Number
R46	315-0151-00	B010100	B239999X	RES.,FXD,CMPSN:150 OHM,5%,0.25W	01121	CB1515
R47	315-0683-00	B010100	B239999	RES.,FXD,CMPSN:68K OHM,5%,0.25W	01121	CB6835
R47	315-0243-00	B240000		RES.,FXD,CMPSN:24K OHM,5%,0.25W	01121	CB2435
R48	315-0334-00	B010100	B239999	RES.,FXD,CMPSN:330K OHM,5%,0.25W	01121	CB3345
R48	315-0152-00	B240000		RES.,FXD,CMPSN:1.5K OHM,5%,0.25W	01121	CB1525
R49	315-0105-00	B010100	B239999	RES.,FXD,CMPSN:1M OHM,5%,0.25W	01121	CB1055
R49	315-0104-00	B240000		RES.,FXD,CMPSN:100K OHM,5%,0.25W	01121	CB1045
R50	315-0223-00			RES.,FXD,CMPSN:22K OHM,5%,0.25W	01121	CB2235
R51	321-0193-00			RES.,FXD,FILM:1K OHM,1%,0.125W	91637	MFF1816G10000F
R53	315-0223-00			RES.,FXD,CMPSN:22K OHM,5%,0.25W	01121	CB2235
R54	321-0193-00			RES.,FXD,FILM:1K OHM,1%,0.125W	91637	MFF1816G10000F
R55	315-0470-00	B010100	B209999X	RES.,FXD,CMPSN:47 OHM,5%,0.25W	01121	CB4705
R56	315-0471-00	B010100	B209999	RES.,FXD,CMPSN:470 OHM,5%,0.25W	01121	CB4715
R56	321-0169-00	B210000		RES.,FXD,FILM:562 OHM,1%,0.125W	91637	MFF1816G562R0F
R57	315-0682-00	B010100	B209999	RES.,FXD,CMPSN:6.8K OHM,5%,0.25W	01121	CB6825
R57	321-0266-00	B210000		RES.,FXD,FILM:5.76K OHM,1%,0.125W	91637	MFF1816G57600F
R58	315-0101-00			RES.,FXD,CMPSN:100 OHM,5%,0.25W	01121	CB1015
R59	315-0103-00	B010100	B209999	RES.,FXD,CMPSN:10K OHM,5%,0.25W	01121	CB1035
R59	321-0282-00	B210000		RES.,FXD,FILM:8.45K OHM,1%,0.125W	91637	MFF1816G84500F
R61	315-0512-00			RES.,FXD,CMPSN:5.1K OHM,5%,0.25W	01121	CB5125
R62	315-0103-00			RES.,FXD,CMPSN:10K OHM,5%,0.25W	01121	CB1035
R63	315-0102-00			RES.,FXD,CMPSN:1K OHM,5%,0.25W	01121	CB1025
R67	315-0512-00			RES.,FXD,CMPSN:5.1K OHM,5%,0.25W	01121	CB5125
R74	315-0510-00			RES.,FXD,CMPSN:51 OHM,5%,0.25W	01121	CB5105
R76	315-0222-00			RES.,FXD,CMPSN:2.2K OHM,5%,0.25W	01121	CB2225
R77	315-0392-00	B010100	B209999	RES.,FXD,CMPSN:3.9K OHM,5%,0.25W	01121	CB3925
R77	315-0362-00	B210000		RES.,FXD,CMPSN:3.6K OHM,5%,0.25W	01121	CB3625
R78	315-0392-00			RES.,FXD,CMPSN:3.9K OHM,5%,0.25W	01121	CB3925
R80	321-0258-00			RES.,FXD,FILM:4.75K OHM,1%,0.125W	91637	MFF1816G47500F
R82	315-0510-00			RES.,FXD,CMPSN:51 OHM,5%,0.25W	01121	CB5105
R83	315-0510-00			RES.,FXD,CMPSN:51 OHM,5%,0.25W	01121	CB5105
R84	315-0510-00			RES.,FXD,CMPSN:51 OHM,5%,0.25W	01121	CB5105
R85	315-0471-00			RES.,FXD,CMPSN:470 OHM,5%,0.25W	01121	CB4715
R86	315-0100-00			RES.,FXD,CMPSN:10 OHM,5%,0.25W	01121	CB1005
R88	321-0230-00			RES.,FXD,FILM:2.43K OHM,1%,0.125W	91637	MFF1816G24300F
R89	315-0910-00			RES.,FXD,CMPSN:91 OHM,5%,0.25W	01121	CB9105
R90	315-0362-00			RES.,FXD,CMPSN:3.6K OHM,5%,0.25W	01121	CB3625
R92	321-0202-00			RES.,FXD,FILM:1.24K OHM,1%,0.125W	91637	MFF1816G12400F
R93	315-0102-00			RES.,FXD,CMPSN:1K OHM,5%,0.25W	01121	CB1025
R95	315-0152-00			RES.,FXD,CMPSN:1.5K OHM,5%,0.25W	01121	CB1525
R96	315-0511-00			RES.,FXD,CMPSN:510 OHM,5%,0.25W	01121	CB5115
R98	315-0511-00			RES.,FXD,CMPSN:510 OHM,5%,0.25W	01121	CB5115
R99	315-0221-00			RES.,FXD,CMPSN:220 OHM,5%,0.25W	01121	CB2215
R101	315-0302-00			RES.,FXD,CMPSN:3K OHM,5%,0.25W	01121	CB3025
R102A,B	311-1404-00			RES.,VAR,NONWIR:5K OHM X 5K OHM,20%,1W	01121	18M824
	----- -----			(R102A,B, FURNISHED AS A UNIT WITH S102)		
R104	315-0103-00			RES.,FXD,CMPSN:10K OHM,5%,0.25W	01121	CB1035
R105	315-0472-00			RES.,FXD,CMPSN:4.7K OHM,5%,0.25W	01121	CB4725
R106	315-0273-00			RES.,FXD,CMPSN:27K OHM,5%,0.25W	01121	CB2735
R109	321-0243-00			RES.,FXD,FILM:3.32K OHM,1%,0.125W	91637	MFF1816G33200F
R110	321-0097-00			RES.,FXD,FILM:100 OHM,1%,0.125W	91637	MFF1816G100R0F
R112	321-0097-00			RES.,FXD,FILM:100 OHM,1%,0.125W	91637	MFF1816G100R0F
R123	315-0102-00			RES.,FXD,CMPSN:1K OHM,5%,0.25W	01121	CB1025
R124	315-0511-00			RES.,FXD,CMPSN:510 OHM,5%,0.25W	01121	CB5115
R125	315-0102-00			RES.,FXD,CMPSN:1K OHM,5%,0.25W	01121	CB1025
R126	315-0102-00			RES.,FXD,CMPSN:1K OHM,5%,0.25W	01121	CB1025
R130	315-0102-00			RES.,FXD,CMPSN:1K OHM,5%,0.25W	01121	CB1025
R132	315-0222-00			RES.,FXD,CMPSN:2.2K OHM,5%,0.25W	01121	CB2225
R133	315-0102-00			RES.,FXD,CMPSN:1K OHM,5%,0.25W	01121	CB1025

Ckt No.	Tektronix Part No.	Serial/Model No. Eff	Dscont	Name & Description	Mfr Code	Mfr Part Number
R134	315-0821-00			RES.,FXD,CMPSN:820 OHM,5%,0.25W	01121	CB8215
R135	315-0123-00			RES.,FXD,CMPSN:12K OHM,5%,0.25W	01121	CB1235
R136	315-0681-00			RES.,FXD,CMPSN:680 OHM,5%,0.25W	01121	CB6815
R137	315-0221-00			RES.,FXD,CMPSN:220 OHM,5%,0.25W	01121	CB2215
R138	315-0472-00			RES.,FXD,CMPSN:4.7K OHM,5%,0.25W	01121	CB4725
R140	315-0391-00			RES.,FXD,CMPSN:390 OHM,5%,0.25W	01121	CB3915
R141	315-0122-00			RES.,FXD,CMPSN:1.2K OHM,5%,0.25W	01121	CB1225
R142	315-0222-00			RES.,FXD,CMPSN:2.2K OHM,5%,0.25W	01121	CB2225
R143	315-0102-00			RES.,FXD,CMPSN:1K OHM,5%,0.25W	01121	CB1025
R144	315-0821-00			RES.,FXD,CMPSN:820 OHM,5%,0.25W	01121	CB8215
R145	315-0123-00			RES.,FXD,CMPSN:12K OHM,5%,0.25W	01121	CB1235
R146	315-0681-00			RES.,FXD,CMPSN:680 OHM,5%,0.25W	01121	CB6815
R147	315-0181-00			RES.,FXD,CMPSN:180 OHM,5%,0.25W	01121	CB1815
R148	315-0472-00			RES.,FXD,CMPSN:4.7K OHM,5%,0.25W	01121	CB4725
R149	315-0100-00			RES.,FXD,CMPSN:10 OHM,5%,0.25W	01121	CB1005
R150	315-0103-00			RES.,FXD,CMPSN:10K OHM,5%,0.25W	01121	CB1035
R152	315-0101-00			RES.,FXD,CMPSN:100 OHM,5%,0.25W	01121	CB1015
R154	315-0223-00			RES.,FXD,CMPSN:22K OHM,5%,0.25W	01121	CB2235
R155	315-0391-00			RES.,FXD,CMPSN:390 OHM,5%,0.25W	01121	CB3915
R157	315-0102-00			RES.,FXD,CMPSN:1K OHM,5%,0.25W	01121	CB1025
R159	315-0510-00			RES.,FXD,CMPSN:51 OHM,5%,0.25W	01121	CB5105
R160	315-0391-00			RES.,FXD,CMPSN:390 OHM,5%,0.25W	01121	CB3915
R161	315-0122-00			RES.,FXD,CMPSN:1.2K OHM,5%,0.25W	01121	CB1225
R162	315-0222-00			RES.,FXD,CMPSN:2.2K OHM,5%,0.25W	01121	CB2225
R163	315-0102-00			RES.,FXD,CMPSN:1K OHM,5%,0.25W	01121	CB1025
R164	315-0821-00			RES.,FXD,CMPSN:820 OHM,5%,0.25W	01121	CB8215
R165	315-0123-00			RES.,FXD,CMPSN:12K OHM,5%,0.25W	01121	CB1235
R166	315-0681-00			RES.,FXD,CMPSN:680 OHM,5%,0.25W	01121	CB6815
R168	315-0472-00			RES.,FXD,CMPSN:4.7K OHM,5%,0.25W	01121	CB4725
R200	321-1068-02	B010100	B149999X	RES.,FXD,FILM:50.5 OHM,0.5%,0.125W	91637	MFF1816D50R50D
R202	321-1068-02	B010100	B149999X	RES.,FXD,FILM:50.5 OHM,0.5%,0.125W	91637	MFF1816D50R50D
R204	321-1068-02	B010100	B149999X	RES.,FXD,FILM:50.5 OHM,0.5%,0.125W	91637	MFF1816D50R50D
R206	321-1068-02	B010100	B149999X	RES.,FXD,FILM:50.5 OHM,0.5%,0.125W	91637	MFF1816D50R50D
R208	315-0393-00	B010100	B149999X	RES.,FXD,CMPSN:39K OHM,5%,0.25W	01121	CB3935
R209	321-0741-02	B010100	B149999X	RES.,FXD,FILM:40.9 OHM,0.5%,0.125W	91637	MFF1816D40R90D
R211	322-0197-00	B010100	B149999X	RES.,FXD,FILM:1.1K OHM,1%,0.25W	91637	MFF1421G11000F
R212	321-0741-02	B010100	B149999X	RES.,FXD,FILM:40.9 OHM,0.5%,0.125W	91637	MFF1816D40R90D
R214	322-0212-00	B010100	B149999X	RES.,FXD,FILM:1.58K OHM,1%,0.25W	75042	CEBT0-1581F
R215	315-0393-00	B010100	B149999X	RES.,FXD,CMPSN:39K OHM,5%,0.25W	01121	CB3935
R216	321-0741-02	B010100	B149999X	RES.,FXD,FILM:40.9 OHM,0.5%,0.125W	91637	MFF1816D40R90D
R218	322-0197-00	B010100	B149999X	RES.,FXD,FILM:1.1K OHM,1%,0.25W	91637	MFF1421G11000F
R219	321-0741-02	B010100	B149999X	RES.,FXD,FILM:40.9 OHM,0.5%,0.125W	91637	MFF1816D40R90D
R222	315-0330-00	B010100	B149999X	RES.,FXD,CMPSN:33 OHM,5%,0.25W	01121	CB3305
R224	315-0330-00	B010100	B149999X	RES.,FXD,CMPSN:33 OHM,5%,0.25W	01121	CB3305
R225	315-0911-00	B010100	B149999X	RES.,FXD,CMPSN:910 OHM,5%,0.25W	01121	CB9115
R226	321-0069-00	B010100	B149999X	RES.,FXD,FILM:51.1 OHM,1%,0.125W	91637	MFF1816G51R10F
R228	321-0060-00	B010100	B149999X	RES.,FXD,FILM:41.2 OHM,1%,0.125W	91637	MFF1816G41R20F
R230	321-0236-00	B010100	B149999X	RES.,FXD,FILM:2.8K OHM,1%,0.125W	91637	MFF1816G28000F
R232	321-0060-00	B010100	B149999X	RES.,FXD,FILM:41.2 OHM,1%,0.125W	91637	MFF1816G41R20F
R234	321-0069-00	B010100	B149999X	RES.,FXD,FILM:51.1 OHM,1%,0.125W	91637	MFF1816G51R10F
R236	315-0911-00	B010100	B149999X	RES.,FXD,CMPSN:910 OHM,5%,0.25W	01121	CB9115
R238	315-0912-00	B010100	B149999X	RES.,FXD,CMPSN:9.1K OHM,5%,0.25W	01121	CB9125
R240	323-0149-00	B010100	B149999X	RES.,FXD,FILM:348 OHM,1%,0.50W	75042	CECT0-3480F
R241	321-0212-00	B010100	B149999X	RES.,FXD,FILM:1.58K OHM,1%,0.125W	91637	MFF1816G15800F
R246	315-0331-00	B010100	B149999X	RES.,FXD,CMPSN:330 OHM,5%,0.25W	01121	CB3315
R250	323-0149-00	B010100	B149999X	RES.,FXD,FILM:348 OHM,1%,0.50W	75042	CECT0-3480F
R251	321-0212-00	B010100	B149999X	RES.,FXD,FILM:1.58K OHM,1%,0.125W	91637	MFF1816G15800F
R259	321-0069-00	B010100	B149999X	RES.,FXD,FILM:51.1 OHM,1%,0.125W	91637	MFF1816G51R10F
R261	321-0069-00	B010100	B149999X	RES.,FXD,FILM:51.1 OHM,1%,0.125W	91637	MFF1816G51R10F

Ckt No.	Tektronix Part No.	Serial/Model No. Eff	Dscont	Name & Description	Mfr Code	Mfr Part Number
R301	307-0106-00			RES.,FXD,CMPSN:4.7 OHM,5%,0.25W	01121	CB47G5
R303	307-0106-00			RES.,FXD,CMPSN:4.7 OHM,5%,0.25W	01121	CB47G5
R305	307-0103-00			RES.,FXD,CMPSN:2.7 OHM,5%,0.25W	01121	CB27G5
R307	321-0069-00			RES.,FXD,FILM:51.1 OHM,1%,0.125W	91637	MFF1816G51R10F
R308	321-0069-00			RES.,FXD,FILM:51.1 OHM,1%,0.125W	91637	MFF1816G51R10F
R310	315-0103-00			RES.,FXD,CMPSN:10K OHM,5%,0.25W	01121	CB1035
R312	315-0562-00			RES.,FXD,CMPSN:5.6K OHM,5%,0.25W	01121	CB5625
R314	315-0103-00			RES.,FXD,CMPSN:10K OHM,5%,0.25W	01121	CB1035
R315	315-0513-00			RES.,FXD,CMPSN:51K OHM,5%,0.25W	01121	CB5135
R317	321-0069-00			RES.,FXD,FILM:51.1 OHM,1%,0.125W	91637	MFF1816G51R10F
R319	321-0069-00			RES.,FXD,FILM:51.1 OHM,1%,0.125W	91637	MFF1816G51R10F
R320	321-0218-00			RES.,FXD,FILM:1.82K OHM,1%,0.125W	91637	MFF1816G18200F
R321	321-0061-00			RES.,FXD,FILM:42.2 OHM,1%,0.125W	91637	MFF1816G42R20F
R322	315-0101-00			RES.,FXD,CMPSN:100 OHM,5%,0.25W	01121	CB1015
R323	321-0061-00			RES.,FXD,FILM:42.2 OHM,1%,0.125W	91637	MFF1816G42R20F
R324	322-0184-00			RES.,FXD,FILM:806 OHM,1%,0.25W	75042	CEBT0-8060F
R326	321-0061-00			RES.,FXD,FILM:42.2 OHM,1%,0.125W	91637	MFF1816G42R20F
R327	322-0184-00			RES.,FXD,FILM:806 OHM,1%,0.25W	75042	CEBT0-8060F
R328	321-0061-00			RES.,FXD,FILM:42.2 OHM,1%,0.125W	91637	MFF1816G42R20F
R329	315-0101-00			RES.,FXD,CMPSN:100 OHM,5%,0.25W	01121	CB1015
R330	321-0049-00			RES.,FXD,FILM:31.6 OHM,1%,0.125W	91637	MFF1816G31R60F
R332	321-0220-00			RES.,FXD,FILM:1.91K OHM,1%,0.125W	91637	MFF1816G19100F
R333	321-0143-00			RES.,FXD,FILM:301 OHM,1%,0.125W	91637	MFF1816G301R0F
R334	321-0082-00			RES.,FXD,FILM:69.8 OHM,1%,0.125W	91637	MFF1816G69R80F
R335	321-0049-00			RES.,FXD,FILM:31.6 OHM,1%,0.125W	91637	MFF1816G31R60F
R336	321-0129-00			RES.,FXD,FILM:215 OHM,1%,0.125W	91637	MFF1816G215R0F
R337	321-0129-00			RES.,FXD,FILM:215 OHM,1%,0.125W	91637	MFF1816G215R0F
R338	321-0069-00			RES.,FXD,FILM:51.1 OHM,1%,0.125W	91637	MFF1816G51R10F
R339	321-0069-00			RES.,FXD,FILM:51.1 OHM,1%,0.125W	91637	MFF1816G51R10F
R340	321-0214-00			RES.,FXD,FILM:1.65K OHM,1%,0.125W	91637	MFF1816G16500F
R341	315-0680-00			RES.,FXD,CMPSN:68 OHM,5%,0.25W	01121	CB6805
R342	315-0331-00			RES.,FXD,CMPSN:330 OHM,5%,0.25W	01121	CB3315
R344	321-0040-00			RES.,FXD,FILM:25.5 OHM,1%,0.125W	91637	MFF1816G25R50F
R345	315-0561-00			RES.,FXD,CMPSN:560 OHM,5%,0.25W	01121	CB5615
R346	321-0040-00			RES.,FXD,FILM:25.5 OHM,1%,0.125W	91637	MFF1816G25R50F
R348	315-0331-00			RES.,FXD,CMPSN:330 OHM,5%,0.25W	01121	CB3315
R349	315-0680-00			RES.,FXD,CMPSN:68 OHM,5%,0.25W	01121	CB6805
R350	321-0214-00			RES.,FXD,FILM:1.65K OHM,1%,0.125W	91637	MFF1816G16500F
R352	315-0430-00			RES.,FXD,CMPSN:43 OHM,5%,0.25W	01121	CB4305
R401	321-0068-00	B010100	B149999X	RES.,FXD,FILM:49.9 OHM,1%,0.125W	91637	MFF1816G49R90F
R403	311-1228-00	B010100	B149999X	RES.,VAR,NONWIR:10K OHM,20%,0.50W	32997	3386F-T04-103
R404	321-0326-00	B010100	B149999X	RES.,FXD,FILM:24.3K OHM,1%,0.125W	91637	MFF1816G24301F
R405	321-0322-00	B010100	B149999X	RES.,FXD,FILM:22.1K OHM,1%,0.125W	91637	MFF1816G22101F
R407	321-0306-00	B010100	B149999X	RES.,FXD,FILM:15K OHM,1%,0.125W	91637	MFF1816G15001F
R408	321-0230-00	B010100	B149999X	RES.,FXD,FILM:2.43K OHM,1%,0.125W	91637	MFF1816G24300F
R409	323-0237-00	B010100	B149999X	RES.,FXD,FILM:2.87K OHM,1%,0.50W	75042	CECT0-2871F
R411	321-0236-00	B010100	B149999X	RES.,FXD,FILM:2.8K OHM,1%,0.125W	91637	MFF1816G28000F
R413	323-0237-00	B010100	B149999X	RES.,FXD,FILM:2.87K OHM,1%,0.50W	75042	CECT0-2871F
R414	321-0230-00	B010100	B149999X	RES.,FXD,FILM:2.43K OHM,1%,0.125W	91637	MFF1816G24300F
R415	315-0153-00	B010100	B149999X	RES.,FXD,CMPSN:15K OHM,5%,0.25W	01121	CB1535
R416	315-0911-00	B010100	B149999X	RES.,FXD,CMPSN:910 OHM,5%,0.25W	01121	CB9115
R417	315-0301-00	B010100	B149999X	RES.,FXD,CMPSN:300 OHM,5%,0.25W	01121	CB3015
R418	315-0751-00	B010100	B149999X	RES.,FXD,CMPSN:750 OHM,5%,0.25W	01121	CB7515
R420	315-0271-00	B010100	B149999X	RES.,FXD,CMPSN:270 OHM,5%,0.25W	01121	CB2715
R421	311-1261-00	B010100	B149999X	RES.,VAR,NONWIR:500 OHM,10%,0.50W	32997	3329P-L58-501
R423	317-0470-00	B010100	B149999X	RES.,FXD,CMPSN:47 OHM,5%,0.125W	01121	BB4705
R424	317-0470-00	B010100	B149999X	RES.,FXD,CMPSN:47 OHM,5%,0.125W	01121	BB4705
R425	311-1260-00	B010100	B149999X	RES.,VAR,NONWIR:250 OHM,10%,0.50W	32997	3329P-L58-251
R427	311-1007-00	B010100	B149999X	RES.,VAR,NONWIR:20 OHM,20%,0.50W	73138	82-38-0

Ckt No.	Tektronix Part No.	Serial/Model No. Eff	Dscont	Name & Description	Mfr Code	Mfr Part Number
R429	321-0114-00	B010100	B149999X	RES.,FXD,FILM:150 OHM,1%,0.125W	91637	MFF1816G150R0F
R433	321-0068-00	B010100	B149999X	RES.,FXD,FILM:49.9 OHM,1%,0.125W	91637	MFF1816G49R90F
R440	321-0181-00	B010100	B149999X	RES.,FXD,FILM:750 OHM,1%,0.125W	91637	MFF1816G750R0F
R442	321-0092-00	B010100	B149999X	RES.,FXD,FILM:88.7 OHM,1%,0.125W	91637	MFF1816G88R70F
R443	321-0201-00	B010100	B149999X	RES.,FXD,FILM:1.21K OHM,1%,0.125W	91637	MFF1816G12100F
R444	321-0092-00	B010100	B149999X	RES.,FXD,FILM:88.7 OHM,1%,0.125W	91637	MFF1816G88R70F
R446	321-0097-00	B010100	B149999X	RES.,FXD,FILM:100 OHM,1%,0.125W	91637	MFF1816G100R0F
R447	311-1260-00	B010100	B149999X	RES.,VAR,NONWIR:250 OHM,10%,0.50W	32997	3329P-L58-251
R448	321-0097-00	B010100	B149999X	RES.,FXD,FILM:100 OHM,1%,0.125W	91637	MFF1816G100R0F
R450	321-0181-00	B010100	B149999X	RES.,FXD,FILM:750 OHM,1%,0.125W	91637	MFF1816G750R0F
R452	323-0148-00	B010100	B149999X	RES.,FXD,FILM:340 OHM,1%,0.50W	91637	MFF1226G340R0F
R453	323-0148-00	B010100	B149999X	RES.,FXD,FILM:340 OHM,1%,0.50W	91637	MFF1226G340R0F
R455	311-0635-00	B010100	B149999X	RES.,VAR,NONWIR:1K OHM,10%,0.50W	73138	82-32-0
R456	315-0181-00	B010100	B019999	RES.,FXD,CMPSN:180 OHM,5%,0.25W	01121	CB1815
R456	315-0181-00	B020000	B149999X	RES.,FXD,CMPSN:180 OHM,5%,0.25W	01121	CB1815
R457	SELECTED	B010100	B149999X			
R458	315-0161-00	B010100	B019999	RES.,FXD,CMPSN:160 OHM,5%,0.25W	01121	CB1615
R458	315-0161-00	B020000	B149999X	RES.,FXD,CMPSN:160 OHM,5%,0.25W	01121	CB1615
R459	301-0471-00	B010100	B149999X	RES.,FXD,CMPSN:470 OHM,5%,0.50W	01121	EB4715
R460	315-0510-00	B010100	B149999X	RES.,FXD,CMPSN:51 OHM,5%,0.25W	01121	CB5105
R461	315-0824-00	B010100	B149999X	RES.,FXD,CMPSN:820K OHM,5%,0.25W	01121	CB8245
R462	323-0148-00	B010100	B149999X	RES.,FXD,FILM:340 OHM,1%,0.50W	91637	MFF1226G340R0F
R463	323-0148-00	B010100	B149999X	RES.,FXD,FILM:340 OHM,1%,0.50W	91637	MFF1226G340R0F
R465	311-0635-00	B010100	B149999X	RES.,VAR,NONWIR:1K OHM,10%,0.50W	73138	82-32-0
R466	315-0271-00	B010100	B019999	RES.,FXD,CMPSN:270 OHM,5%,0.25W	01121	CB2715
R466	315-0271-00	B020000	B149999X	RES.,FXD,CMPSN:270 OHM,5%,0.25W	01121	CB2715
R467	SELECTED	B010100	B149999X			
R468	315-0301-00	B010100	B019999	RES.,FXD,CMPSN:300 OHM,5%,0.25W	01121	CB3015
R468	315-0301-00	B020000	B149999X	RES.,FXD,CMPSN:300 OHM,5%,0.25W	01121	CB3015
R473	315-0820-00	B010100	B149999X	RES.,FXD,CMPSN:82 OHM,5%,0.25W	01121	CB8205
R474	310-0701-00	B010100	B149999X	RES.,FXD,WW:430 OHM,1%,8W	80009	310-0701-00
R477	315-0820-00	B010100	B149999X	RES.,FXD,CMPSN:82 OHM,5%,0.25W	01121	CB8205
R478	310-0701-00	B010100	B149999X	RES.,FXD,WW:430 OHM,1%,8W	80009	310-0701-00
R480	307-0103-00	B010100	B149999X	RES.,FXD,CMPSN:2.7 OHM,5%,0.25W	01121	CB27G5
R484	321-0197-00	B010100	B149999X	RES.,FXD,FILM:1.1K OHM,1%,0.125W	91637	MFF1816G11000F
R486	311-1260-00	B010100	B149999X	RES.,VAR,NONWIR:250 OHM,10%,0.50W	32997	3329P-L58-251
R488	323-0054-00	B010100	B149999X	RES.,FXD,FILM:35.7 OHM,1%,0.50W	75042	CECT0-35R70F
R490	307-0103-00	B010100	B149999X	RES.,FXD,CMPSN:2.7 OHM,5%,0.25W	01121	CB27G5
R491	315-0100-00	B010100	B149999X	RES.,FXD,CMPSN:10 OHM,5%,0.25W	01121	CB1005
R495	315-0822-00	B010100	B149999X	RES.,FXD,CMPSN:8.2K OHM,5%,0.25W	01121	CB8225
R501	321-1068-01			RES.,FXD,FILM:50.5 OHM,0.5%,0.125W	91637	MFF1816G50R50D
R502	315-0100-00			RES.,FXD,CMPSN:10 OHM,5%,0.25W	01121	CB1005
R503	321-1068-01			RES.,FXD,FILM:50.5 OHM,0.5%,0.125W	91637	MFF1816G50R50D
R505	321-0297-00			RES.,FXD,FILM:12.1K OHM,1%,0.125W	91637	MFF1816G12101F
R506	321-0069-00			RES.,FXD,FILM:51.1 OHM,1%,0.125W	91637	MFF1816G51R10F
R508	321-0184-00			RES.,FXD,FILM:806 OHM,1%,0.125W	91637	MFF1816G806R0F
R509	321-0069-00			RES.,FXD,FILM:51.1 OHM,1%,0.125W	91637	MFF1816G51R10F
R511	321-0155-00			RES.,FXD,FILM:402 OHM,1%,0.125W	91637	MFF1816G402R0F
R512	311-1224-00			RES.,VAR,NONWIR:500 OHM,20%,0.50W	32997	3386F-T04-501
R513	321-0136-00			RES.,FXD,FILM:255 OHM,1%,0.125W	91637	MFF1816G255R0F
R514	323-0219-00			RES.,FXD,FILM:1.87K OHM,1%,0.50W	75042	CECT0-1871F
R515	323-0219-00			RES.,FXD,FILM:1.87K OHM,1%,0.50W	75042	CECT0-1871F
R517	321-0212-00			RES.,FXD,FILM:1.58K OHM,1%,0.125W	91637	MFF1816G15800F
R519	321-0108-00	B010100	B029999	RES.,FXD,FILM:130 OHM,1%,0.125W	91637	MFF1816G130R0F
R519	321-0108-00	B030000		RES.,FXD,FILM:130 OHM,1%,0.125W	91637	MFF1816G130R0F
R520	----- -----	B010100	B019999X	(ADDED IF NECESSARY)		
R521	321-0261-00			RES.,FXD,FILM:5.11K OHM,1%,0.125W	91637	MFF1816G51100F
R522	321-0261-00			RES.,FXD,FILM:5.11K OHM,1%,0.125W	91637	MFF1816G51100F
R524	321-0202-00			RES.,FXD,FILM:1.24K OHM,1%,0.125W	91637	MFF1816G12400F

Ckt No.	Tektronix Part No.	Serial/Model No. Eff	Dscont	Name & Description	Mfr Code	Mfr Part Number
R525	311-1222-00			RES.,VAR,NONWIR:100 OHM,20%,0.50W	32997	3386F-T04-101
R526	321-0202-00			RES.,FXD,FILM:1.24K OHM,1%,0.125W	91637	MFF1816G12400F
R527	315-0222-00	B010100	B019999X	RES.,FXD,CMPSN:2.2K OHM,5%,0.25W	01121	CB2225
R529	315-0473-00			RES.,FXD,CMPSN:47K OHM,5%,0.25W	01121	CB4735
R531	323-0222-00			RES.,FXD,FILM:2K OHM,1%,0.50W	75042	CECT0-2001F
R532	323-0222-00			RES.,FXD,FILM:2K OHM,1%,0.50W	75042	CECT0-2001F
R534	321-0269-00			RES.,FXD,FILM:6.19K OHM,1%,0.125W	91637	MFF1816G61900F
R535	311-1225-00			RES.,VAR,NONWIR:1K OHM,20%,0.50W	32997	3386F-T04-102
R536	321-0269-00			RES.,FXD,FILM:6.19K OHM,1%,0.125W	91637	MFF1816G61900F
R538	321-0320-00			RES.,FXD,FILM:21K OHM,1%,0.125W	91637	MFF1816G21001F
R540	321-0225-00			RES.,FXD,FILM:2.15K OHM,1%,0.125W	91637	MFF1816G21500F
R542	315-0300-00			RES.,FXD,CMPSN:30 OHM,5%,0.25W	01121	CB3005
R543	321-0193-00			RES.,FXD,FILM:1K OHM,1%,0.125W	91637	MFF1816G10000F
R544	315-0300-00			RES.,FXD,CMPSN:30 OHM,5%,0.25W	01121	CB3005
R546	321-0320-00			RES.,FXD,FILM:21K OHM,1%,0.125W	91637	MFF1816G21001F
R548	321-0225-00			RES.,FXD,FILM:2.15K OHM,1%,0.125W	91637	MFF1816G21500F
R549	315-0102-00			RES.,FXD,CMPSN:1K OHM,5%,0.25W	01121	CB1025
R551	303-0470-00			RES.,FXD,CMPSN:47 OHM,5%,1W	01121	GB4705
R555	315-0470-00			RES.,FXD,CMPSN:47 OHM,5%,0.25W	01121	CB4705
R556	301-0393-00			RES.,FXD,CMPSN:39K OHM,5%,0.50W	01121	EB3935
R558	323-0231-00			RES.,FXD,FILM:2.49K OHM,1%,0.50W	75042	CECT0-2491F
R559	315-0100-00			RES.,FXD,CMPSN:10 OHM,5%,0.25W	01121	CB1005
R561	315-0100-00			RES.,FXD,CMPSN:10 OHM,5%,0.25W	01121	CB1005
R562	323-0097-00			RES.,FXD,FILM:100 OHM,1%,0.50W	75042	CECT0-1000F
R563	323-0066-00			RES.,FXD,FILM:47.5 OHM,1%,0.50W	75042	CECT0-47R50F
R565	315-0101-00			RES.,FXD,CMPSN:100 OHM,5%,0.25W	01121	CB1015
R566	323-0287-00			RES.,FXD,FILM:9.53K OHM,1%,0.50W	75042	CECT0-9531F
R567	323-0287-00			RES.,FXD,FILM:9.53K OHM,1%,0.50W	75042	CECT0-9531F
R568	315-0471-00	B010100	B019999X	RES.,FXD,CMPSN:470 OHM,5%,0.25W	01121	CB4715
R569	321-0189-00			RES.,FXD,FILM:909 OHM,1%,0.125W	91637	MFF1816G909R0F
R570	321-0251-00			RES.,FXD,FILM:4.02K OHM,1%,0.125W	91637	MFF1816G40200F
R571	321-0830-03			RES.,FXD,FILM:2.41K OHM,0.25%,0.125W	91637	MFF1816D24100C
R573	321-0273-00			RES.,FXD,FILM:6.81K OHM,1%,0.125W	91637	MFF1816G68100F
R574	323-0352-00			RES.,FXD,FILM:45.3K OHM,1%,0.50W	75042	CECT0-4532F
R575	315-0470-00			RES.,FXD,CMPSN:47 OHM,5%,0.25W	01121	CB4705
R576	301-0393-00			RES.,FXD,CMPSN:39K OHM,5%,0.50W	01121	EB3935
R578	323-0231-00			RES.,FXD,FILM:2.49K OHM,1%,0.50W	75042	CECT0-2491F
R579	315-0100-00			RES.,FXD,CMPSN:10 OHM,5%,0.25W	01121	CB1005
R581	315-0100-00			RES.,FXD,CMPSN:10 OHM,5%,0.25W	01121	CB1005
R582	323-0097-00			RES.,FXD,FILM:100 OHM,1%,0.50W	75042	CECT0-1000F
R583	323-0066-00			RES.,FXD,FILM:47.5 OHM,1%,0.50W	75042	CECT0-47R50F
R584	315-0185-00	XB070000		RES.,FXD,CMPSN:1.8M OHM,5%,0.25W	01121	CB1855
R585	315-0101-00			RES.,FXD,CMPSN:100 OHM,5%,0.25W	01121	CB1015
R586	323-0287-00			RES.,FXD,FILM:9.53K OHM,1%,0.50W	75042	CECT0-9531F
R587	323-0287-00			RES.,FXD,FILM:9.53K OHM,1%,0.50W	75042	CECT0-9531F
R588	315-0471-00	B010100	B019999X	RES.,FXD,CMPSN:470 OHM,5%,0.25W	01121	CB4715
R589	321-0189-00			RES.,FXD,FILM:909 OHM,1%,0.125W	91637	MFF1816G909R0F
R593	315-0100-00			RES.,FXD,CMPSN:10 OHM,5%,0.25W	01121	CB1005
R595	307-0106-00			RES.,FXD,CMPSN:4.7 OHM,5%,0.25W	01121	CB47G5
R597	315-0100-00			RES.,FXD,CMPSN:10 OHM,5%,0.25W	01121	CB1005
R599	307-0103-00			RES.,FXD,CMPSN:2.7 OHM,5%,0.25W	01121	CB27G5
R602	315-0101-00			RES.,FXD,CMPSN:100 OHM,5%,0.25W	01121	CB1015
R605	315-0561-00			RES.,FXD,CMPSN:560 OHM,5%,0.25W	01121	CB5615
R607	321-0020-00			RES.,FXD,FILM:15.8 OHM,1%,0.125W	91637	MFF1816G15R80F
R608	321-0089-00			RES.,FXD,FILM:82.5 OHM,1%,0.125W	91637	MFF1816G82R50F
R610	307-0106-00			RES.,FXD,CMPSN:4.7 OHM,5%,0.25W	01121	CB47G5
R612	321-0193-00	B010100	B299999	RES.,FXD,FILM:1K OHM,1%,0.125W	91637	MFF1816G10000F
R612	321-0612-00	B300000		RES.,FXD,FILM:500 OHM,1%,0.125W	91637	MFF1816G500R0F
R613	321-0222-00	B010100	B299999	RES.,FXD,FILM:2K OHM,1%,0.125W	91637	MFF1816G20000F

Ckt No.	Tektronix Part No.	Serial/Model No. Eff	Dscont	Name & Description	Mfr Code	Mfr Part Number
R613	321-0193-00	B300000		RES.,FXD,FILM:1K OHM,1%,0.125W	91637	MFF1816G10000F
R615	315-0240-00			RES.,FXD,CMPSN:24 OHM,5%,0.25W	01121	CB2405
R617	321-0020-00			RES.,FXD,FILM:15.8 OHM,1%,0.125W	91637	MFF1816G15R80F
R619	315-0101-00			RES.,FXD,CMPSN:100 OHM,5%,0.25W	01121	CB1015
R622	321-0208-00			RES.,FXD,FILM:1.43K OHM,1%,0.125W	91637	MFF1816G14300F
R623	307-0106-00			RES.,FXD,CMPSN:4.7 OHM,5%,0.25W	01121	CB47G5
R625	321-0224-00			RES.,FXD,FILM:2.1K OHM,1%,0.125W	91637	MFF1816G21000F
R627	315-0101-00			RES.,FXD,CMPSN:100 OHM,5%,0.25W	01121	CB1015
R630	315-0101-00			RES.,FXD,CMPSN:100 OHM,5%,0.25W	01121	CB1015
R633	315-0222-00			RES.,FXD,CMPSN:2.2K OHM,5%,0.25W	01121	CB2225
R636	315-0241-00			RES.,FXD,CMPSN:240 OHM,5%,0.25W	01121	CB2415
R637	315-0152-00			RES.,FXD,CMPSN:1.5K OHM,5%,0.25W	01121	CB1525
R639	315-0101-00			RES.,FXD,CMPSN:100 OHM,5%,0.25W	01121	CB1015
R641	315-0272-00			RES.,FXD,CMPSN:2.7K OHM,5%,0.25W	01121	CB2725
R643	315-0220-00			RES.,FXD,CMPSN:22 OHM,5%,0.25W	01121	CB2205
R645	321-0260-00			RES.,FXD,FILM:4.99K OHM,1%,0.125W	91637	MFF1816G49900F
R647	321-0190-00			RES.,FXD,FILM:931 OHM,1%,0.125W	91637	MFF1816G931R0F
R651	315-0201-00			RES.,FXD,CMPSN:200 OHM,5%,0.25W	01121	CB2015
R652	315-0123-00			RES.,FXD,CMPSN:12K OHM,5%,0.25W	01121	CB1235
R654	315-0201-00			RES.,FXD,CMPSN:200 OHM,5%,0.25W	01121	CB2015
R655	315-0123-00			RES.,FXD,CMPSN:12K OHM,5%,0.25W	01121	CB1235
R657	315-0201-00			RES.,FXD,CMPSN:200 OHM,5%,0.25W	01121	CB2015
R658	315-0123-00			RES.,FXD,CMPSN:12K OHM,5%,0.25W	01121	CB1235
R660	315-0101-00			RES.,FXD,CMPSN:100 OHM,5%,0.25W	01121	CB1015
R662	315-0821-00			RES.,FXD,CMPSN:820 OHM,5%,0.25W	01121	CB8215
R663	321-0193-00			RES.,FXD,FILM:1K OHM,1%,0.125W	91637	MFF1816G10000F
R667	315-0561-00			RES.,FXD,CMPSN:560 OHM,5%,0.25W	01121	CB5615
R669	307-0106-00			RES.,FXD,CMPSN:4.7 OHM,5%,0.25W	01121	CB47G5
R670	321-0143-00			RES.,FXD,FILM:301 OHM,1%,0.125W	91637	MFF1816G301R0F
R672	321-0180-00			RES.,FXD,FILM:732 OHM,1%,0.125W	91637	MFF1816G732R0F
R673	321-0226-00			RES.,FXD,FILM:2.21K OHM,1%,0.125W	91637	MFF1816G22100F
R675	321-0189-00			RES.,FXD,FILM:909 OHM,1%,0.125W	91637	MFF1816G909R0F
R677	315-0390-00			RES.,FXD,CMPSN:39 OHM,5%,0.25W	01121	CB3905
R679	307-0106-00			RES.,FXD,CMPSN:4.7 OHM,5%,0.25W	01121	CB47G5
R805	307-0113-00	B010100	B219999X	RES.,FXD,CMPSN:5.1 OHM,5%,0.25W	01121	CB51G5
R806	302-0473-00			RES.,FXD,CMPSN:47K OHM,10%,0.50W	01121	EB4731
R808	302-0223-00			RES.,FXD,CMPSN:22K OHM,10%,0.50W	01121	EB2231
R809	302-0223-00			RES.,FXD,CMPSN:22K OHM,10%,0.50W	01121	EB2231
R811	302-0472-00			RES.,FXD,CMPSN:4.7K OHM,10%,050W	01121	EB4721
R814	302-0472-00			RES.,FXD,CMPSN:4.7K OHM,10%,050W	01121	EB4721
R821	302-0472-00			RES.,FXD,CMPSN:4.7K OHM,10%,050W	01121	EB4721
R822	315-0102-00			RES.,FXD,CMPSN:1K OHM,5%,0.25W	01121	CB1025
R823	315-0151-00			RES.,FXD,CMPSN:150 OHM,5%,0.25W	01121	CB1515
R824	315-0470-00			RES.,FXD,CMPSN:47 OHM,5%,0.25W	01121	CB4705
R826	315-0302-00			RES.,FXD,CMPSN:3K OHM,5%,0.25W	01121	CB3025
R827	315-0472-00			RES.,FXD,CMPSN:4.7K OHM,5%,0.25W	01121	CB4725
R830	315-0911-00			RES.,FXD,CMPSN:910 OHM,5%,0.25W	01121	CB9115
R831	315-0392-00			RES.,FXD,CMPSN:3.9K OHM,5%,0.25W	01121	CB3925
R833	315-0683-00			RES.,FXD,CMPSN:68K OHM,5%,0.25W	01121	CB6835
R837	307-0054-00			RES.,FXD,CMPSN:3.6 OHM,5%,0.50W	01121	EB36GB
R838	307-0054-00			RES.,FXD,CMPSN:3.6 OHM,5%,0.50W	01121	EB36GB
R853	315-0473-00			RES.,FXD,CMPSN:47K OHM,5%,0.25W	01121	CB4735
R855	323-0309-00			RES.,FXD,FILM:16.2K OHM,1%,0.50W	75042	CECT0-1622F
R856	323-0289-00			RES.,FXD,FILM:10K OHM,1%,0.50W	75042	CECT0-1002F
R858	321-0924-07			RES.,FXD,FILM:40K OHM,0.1%,0.125W	91637	MFF1816C40001B
R859	321-0924-07			RES.,FXD,FILM:40K OHM,0.1%,0.125W	91637	MFF1816C40001B
R860	315-0684-00			RES.,FXD,CMPSN:680K OHM,5%,0.25W	01121	CB6845
R862	315-0204-00			RES.,FXD,CMPSN:200K OHM,5%,0.25W	01121	CB2045
R864	315-0203-00			RES.,FXD,CMPSN:20K OHM,5%,0.25W	01121	CB2035

Ckt No.	Tektronix Part No.	Serial/Model No. Eff	Dscont	Name & Description	Mfr Code	Mfr Part Number
R866	315-0332-00			RES.,FXD,CMPSN:3.3K OHM,5%,0.25W	01121	CB3325
R867	315-0824-00			RES.,FXD,CMPSN:820K OHM,5%,0.25W	01121	CB8245
R869	315-0123-00	XB365889		RES.,FXD,CMPSN:12K OHM,5%,0.25W	01121	CB1235
R870	315-0122-00			RES.,FXD,CMPSN:1.2K OHM,5%,0.25W	01121	CB1225
R872	315-0151-00			RES.,FXD,CMPSN:150 OHM,5%,0.25W	01121	CB1515
R875	308-0677-00			RES.,FXD,WW:1 OHM,5%,2W	75042	BWH-1R000J
R876	315-0154-00			RES.,FXD,CMPSN:150K OHM,5%,0.25W	01121	CB1545
R877	315-0511-00			RES.,FXD,CMPSN:510 OHM,5%,0.25W	01121	CB5115
R878	315-0104-00			RES.,FXD,CMPSN:100K OHM,5%,0.25W	01121	CB1045
R879	315-0124-00			RES.,FXD,CMPSN:120K OHM,5%,0.25W	01121	CB1245
R880	323-0272-00			RES.,FXD,FILM:6.65K OHM,1%,0.50W	75042	CECT0-6651F
R881	311-1223-00			RES.,VAR,NONWIR:250 OHM,10%,0.50W	32997	3386F-T04-251
R882	323-0206-00			RES.,FXD,FILM:1.37K OHM,1%,0.50W	75042	CECT0-1371F
R883	321-0223-00			RES.,FXD,FILM:2.05K OHM,1%,0.125W	91637	MFF1816G20500F
..884	323-0306-00			RES.,FXD,FILM:15K OHM,1%,0.50W	75042	CECT0-1502F
R886	315-0224-00			RES.,FXD,CMPSN:220K OHM,5%,0.25W	01121	CB2245
R889	315-0911-00			RES.,FXD,CMPSN:910 OHM,5%,0.25W	01121	CB9115
R890	323-0264-00			RES.,FXD,FILM:5.49K OHM,1%,0.50W	91637	MFF1226G54900F
R891	315-0473-00			RES.,FXD,CMPSN:47K OHM,5%,0.25W	01121	CB4735
R892	315-0682-00			RES.,FXD,CMPSN:6.8K OHM,5%,0.25W	01121	CB6825
R894	315-0245-00			RES.,FXD,CMPSN:2.4M OHM,5%,0.25W	01121	CB2455
R896	301-0363-00			RES.,FXD,CMPSN:36K OHM,5%,0.50W	01121	EB3635
R898	315-0182-00			RES.,FXD,CMPSN:1.8K OHM,5%,0.25W	01121	CB1825
R901	315-0151-00			RES.,FXD,CMPSN:150 OHM,5%,0.25W	01121	CB1515
R903	308-0677-00			RES.,FXD,WW:1 OHM,5%,2W	75042	BWH-1R000J
R904	308-0679-00			RES.,FXD,WW:0.51 OHM,5%,2W	75042	BWH-R5100J
R906	315-0304-00			RES.,FXD,CMPSN:300K OHM,5%,0.25W	01121	CB3045
R907	315-0104-00	B010100	B209999	RES.,FXD,CMPSN:100K OHM,5%,0.25W	01121	CB1045
R907	315-0753-00	B210000		RES.,FXD,CMPSN:75K OHM,5%,0.25W	01121	CB7535
R908	315-0431-00			RES.,FXD,CMPSN:430 OHM,5%,0.25W	01121	CB4315
R910	315-0681-00			RES.,FXD,CMPSN:680 OHM,5%,0.25W	01121	CB6815
R911	315-0563-00			RES.,FXD,CMPSN:56K OHM,5%,0.25W	01121	CB5635
R912	315-0182-00			RES.,FXD,CMPSN:1.8K OHM,5%,0.25W	01121	CB1825
R915	321-1296-07			RES.,FXD,FILM:12K OHM,0.1%,0.125W	91637	MFF1816C12001B
R916	321-0924-07			RES.,FXD,FILM:40K OHM,0.1%,0.125W	91637	MFF1816C40001B
R918	301-0683-00			RES.,FXD,CMPSN:68K OHM,5%,0.50W	01121	EB6835
R921	315-0912-00			RES.,FXD,CMPSN:9.1K OHM,5%,0.25W	01121	CB9125
R922	315-0623-00			RES.,FXD,CMPSN:62K OHM,5%,0.25W	01121	CB6235
R923	315-0512-00			RES.,FXD,CMPSN:5.1K OHM,5%,0.25W	01121	CB5125
R924	315-0623-00			RES.,FXD,CMPSN:62K OHM,5%,0.25W	01121	CB6235
R927	315-0472-00			RES.,FXD,CMPSN:4.7K OHM,5%,0.25W	01121	CB4725
R932	315-0182-00			RES.,FXD,CMPSN:1.8K OHM,5%,0.25W	01121	CB1825
R935	308-0678-00			RES.,FXD,WW:0.1 OHM,5%,2W	75042	BWH-R1000J
R936	301-0273-00			RES.,FXD,CMPSN:27K OHM,5%,0.50W	01121	EB2735
R937	315-0361-00	B010100	B189999	RES.,FXD,CMPSN:360 OHM,5%,0.25W	01121	CB3615
R937	321-0151-00	B190000		RES.,FXD,FILM:365 OHM,1%,0.125W	91637	MFF1816G365R0F
R938	315-0303-00	B010100	B189999	RES.,FXD,CMPSN:30K OHM,5%,0.25W	01121	CB3035
R938	321-0330-00	B190000		RES.,FXD,FILM:26.7K OHM,1%,0.125W	91637	MFF1816G26701F
R939	315-0184-00	B010100	B189999	RES.,FXD,CMPSN:180K OHM,5%,0.25W	01121	CB1845
R939	321-0409-00	B190000		RES.,FXD,FILM:178K OHM,1%,0.125W	91637	MFF1816G17802F
R940	315-0822-00			RES.,FXD,CMPSN:8.2K OHM,5%,0.25W	01121	CB8225
R942	315-0154-00			RES.,FXD,CMPSN:150K OHM,5%,0.25W	01121	CB1545
R945	321-0332-07			RES.,FXD,FILM:28K OHM,0.1%,0.125W	91637	MFF1816C28001B
R946	321-1296-07			RES.,FXD,FILM:12K OHM,0.1%,0.125W	91637	MFF1816C12001B
R948	315-0914-00			RES.,FXD,CMPSN:910K OHM,5%,0.25W	01121	CB9145
R950	315-0681-00	B010100	B366056	RES.,FXD,CMPSN:680 OHM,5%,0.25W	01121	CB6815
R950	315-0272-00	B366057		RES.,FXD,CMPSN:2.7K OHM,5%,0.25W	01121	CB2725
R952	301-0303-00	B010100	B365888	RES.,FXD,CMPSN:30K OHM,5%,0.50W	01121	EB3035
R952	303-0303-00	B365889		RES.,FXD,CMPSN:30K OHM,5%,1W	01121	GB3035
R954	315-0472-00			RES.,FXD,CMPSN:4.7K OHM,5%,0.25W	01121	CB4725
R956	307-0103-00			RES.,FXD,CMPSN:2.7 OHM,5%,0.25W	01121	CB27G5
R957	315-0151-00	B010100	B329999	RES.,FXD,CMPSN:150 OHM,5%,0.25W	01121	CB1515

Ckt No.	Tektronix Part No.	Serial/Model No. Eff	Dscont	Name & Description	Mfr Code	Mfr Part Number
R957	315-0510-00	B330000		RES.,FXD,CMPSN:51 OHM,5%,0.25W	01121	CB5105
R958	308-0678-00			RES.,FXD,WW:0.1 OHM,5%,2W	75042	BWH-R1000J
R959	308-0680-00			RES.,FXD,WW:0.045 OHM,10%,3W	91637	RS2B-R0450K
R961	315-0221-00			RES.,FXD,CMPSN:220 OHM,5%,0.25W	01121	CB2215
R963	315-0682-00			RES.,FXD,CMPSN:6.8K OHM,5%,0.25W	01121	CB6825
R966	315-0123-00			RES.,FXD,CMPSN:12K OHM,5%,0.25W	01121	CB1235
R967	315-0364-00			RES.,FXD,CMPSN:360K OHM,5%,0.25W	01121	CB3645
R970	321-0926-07			RES.,FXD,FILM:4K OHM,0.1%,0.125W	91637	MFF1816C40000B
R971	321-0924-07			RES.,FXD,FILM:40K OHM,0.1%,0.125W	91637	MFF1816C40001B
R973	315-0104-00	B010100	B059999	RES.,FXD,CMPSN:100K OHM,5%,0.25W	01121	CB1045
R973	315-0683-00	B060000		RES.,FXD,CMPSN:68K OHM,5%,0.25W	01121	CB6835
R974	315-0303-00	XB060000		RES.,FXD,CMPSN:30K OHM,5%,0.25W	01121	CB3035
R975	315-0362-00			RES.,FXD,CMPSN:3.6K OHM,5%,0.25W	01121	CB3625
R977	315-0184-00			RES.,FXD,CMPSN:180K OHM,5%,0.25W	01121	CB1845
R979	315-0822-00			RES.,FXD,CMPSN:8.2K OHM,5%,0.25W	01121	CB8225
R980	315-0164-00			RES.,FXD,CMPSN:160K OHM,5%,0.25W	01121	CB1645
R983	315-0472-00			RES.,FXD,CMPSN:4.7K OHM,5%,0.25W	01121	CB4725
R985	304-0470-00			RES.,FXD,CMPSN:47 OHM,10%,1W	01121	GB4701
R986	315-0122-00			RES.,FXD,CMPSN:1.2K OHM,5%,0.25W	01121	CB1225
R989	308-0678-00			RES.,FXD,WW:0.1 OHM,5%,2W	75042	BWH-R1000J
R991	315-0753-00			RES.,FXD,CMPSN:75K OHM,5%,0.25W	01121	CB7535
R993	315-0241-00			RES.,FXD,CMPSN:240 OHM,5%,0.25W	01121	CB2415
R994	315-0124-00			RES.,FXD,CMPSN:120K OHM,5%,0.25W	01121	CB1245
R995	315-0562-00			RES.,FXD,CMPSN:5.6K OHM,5%,0.25W	01121	CB5625
R1000	301-0105-00	XB365827		RES.,FXD,CMPSN:1M OHM,5%,0.50W	01121	EB1055
R1018	315-0102-00			RES.,FXD,CMPSN:1K OHM,5%,0.25W	01121	CB1025
R1019	315-0102-00			RES.,FXD,CMPSN:1K OHM,5%,0.25W	01121	CB1025
R1020	315-0150-00			RES.,FXD,CMPSN:15 OHM,5%,0.25W	01121	CB1505
R1022	315-0303-00			RES.,FXD,CMPSN:30K OHM,5%,0.25W	01121	CB3035
R1045	311-0125-00	B010100	B039999	RES.,VAR,NONWIR:50K OHM,20%,0.2W	12697	381-CM25340
R1045	311-1529-00	B040000		RES.,VAR,NONWIR:PNL,50K OHM,1W	12697	381-CM39977
R1061	315-0223-00			RES.,FXD,CMPSN:22K OHM,5%,0.25W	01121	CB2235
R1062	315-0362-00			RES.,FXD,CMPSN:3.6K OHM,5%,0.25W	01121	CB3625
R1063	315-0433-00			RES.,FXD,CMPSN:43K OHM,5%,0.25W	01121	CB4335
R1066	315-0183-00			RES.,FXD,CMPSN:18K OHM,5%,0.25W	01121	CB1835
R1067	315-0513-00			RES.,FXD,CMPSN:51K OHM,5%,0.25W	01121	CB5135
R1069	315-0433-00			RES.,FXD,CMPSN:43K OHM,5%,0.25W	01121	CB4335
R1071	323-0260-00			RES.,FXD,FILM:4.99K OHM,1%,0.50W	75042	CECT0-4991F
R1073	315-0222-00			RES.,FXD,CMPSN:2.2K OHM,5%,0.25W	01121	CB2225
R1074	315-0102-00			RES.,FXD,CMPSN:1K OHM,5%,0.25W	01121	CB1025
R1076	315-0752-00			RES.,FXD,CMPSN:7.5K OHM,5%,0.25W	01121	CB7525
R1077	311-1227-00			RES.,VAR,NONWIR:5K OHM,20%,0.50W	32997	3386F-T04-502
R1079	321-0318-00			RES.,FXD,FILM:20K OHM,1%,0.125W	91637	MFF1816G20001F
R1081	321-0812-07			RES.,FXD,FILM:455 OHM,0.1%,0.125W	91637	MFF1816C455R0B
R1082	321-0825-03			RES.,FXD,FILM:50.8 OHM,0.25%,0.125W	91637	MFF1816D50R80C
R1084	321-0816-07			RES.,FXD,FILM:5K OHM,0.1%,0.125W	91637	MFF1816C50000B
R1085	321-1068-07			RES.,FXD,FILM:50.5 OHM,0.1%,0.125W	91637	MFF1816C50R50B
R1087	308-0679-00			RES.,FXD,WW:0.51 OHM,5%,2W	75042	BWH-R5100J
R1095	311-1055-00			RES.,VAR,NONWIR:5K OHM,20%,0.50W,W/SW	12697	381-CM40034
	----- -----			(R1095, FURNISHED AS A UNIT WITH S1030)		
R1101	315-0470-00			RES.,FXD,CMPSN:47 OHM,5%,0.25W	01121	CB4705
R1103	315-0471-00			RES.,FXD,CMPSN:470 OHM,5%,0.25W	01121	CB4715
R1105	315-0103-00			RES.,FXD,CMPSN:10K OHM,5%,0.25W	01121	CB1035
R1106	315-0123-00			RES.,FXD,CMPSN:12K OHM,5%,0.25W	01121	CB1235
R1108	315-0471-00			RES.,FXD,CMPSN:470 OHM,5%,0.25W	01121	CB4715
R1111	321-0233-00			RES.,FXD,FILM:2.61K OHM,1%,0.125W	91637	MFF1816G26100F
R1113	315-0102-00			RES.,FXD,CMPSN:1K OHM,5%,0.25W	01121	CB1025
R1114	315-0511-00			RES.,FXD,CMPSN:510 OHM,5%,0.25W	01121	CB5115
R1115	315-0121-00			RES.,FXD,CMPSN:120 OHM,5%,0.25W	01121	CB1215
R1116	311-1248-00			RES.,VAR,NONWIR:500 OHM,10%,0.50W	73138	72X-23-0-501K

Ckt No.	Tektronix Part No.	Serial/Model No. Eff	Dscont	Name & Description	Mfr Code	Mfr Part Number
R1119	315-0102-00			RES.,FXD,CMPSN:1K OHM,5%,0.25W	01121	CB1025
R1120	301-0563-00			RES.,FXD,CMPSN:56K OHM,5%,0.50W	01121	EB5635
R1121	311-1237-00			RES.,VAR,NONWIR:1K OHM,10%,0.50W	32997	3386X-T07-102
R1122	315-0912-00			RES.,FXD,CMPSN:9.1K OHM,5%,0.25W	01121	CB9125
R1124	315-0562-00			RES.,FXD,CMPSN:5.6K OHM,5%,0.25W	01121	CB5625
R1126	303-0203-00			RES.,FXD,CMPSN:20K OHM,5%,1W	01121	GB2035
R1128	315-0102-00			RES.,FXD,CMPSN:1K OHM,5%,0.25W	01121	CB1025
R1129	315-0102-00			RES.,FXD,CMPSN:1K OHM,5%,0.25W	01121	CB1025
R1131	315-0100-00			RES.,FXD,CMPSN:10 OHM,5%,0.25W	01121	CB1005
R1132	315-0392-00			RES.,FXD,CMPSN:3.9K OHM,5%,0.25W	01121	CB3925
R1135	315-0103-00			RES.,FXD,CMPSN:10K OHM,5%,0.25W	01121	CB1035
R1137	315-0121-00			RES.,FXD,CMPSN:120 OHM,5%,0.25W	01121	CB1215
R1138	315-0682-00			RES.,FXD,CMPSN:6.8K OHM,5%,0.25W	01121	CB6825
R1139	323-0312-00			RES.,FXD,FILM:17.4K OHM,1%,0.50W	91637	MFF1226G17401F
R1141	315-0912-00			RES.,FXD,CMPSN:9.1K OHM,5%,0.25W	01121	CB9125
R1144	315-0562-00			RES.,FXD,CMPSN:5.6K OHM,5%,0.25W	01121	CB5625
R1146	303-0203-00			RES.,FXD,CMPSN:20K OHM,5%,1W	01121	GB2035
R1148	315-0102-00			RES.,FXD,CMPSN:1K OHM,5%,0.25W	01121	CB1025
R1149	315-0102-00			RES.,FXD,CMPSN:1K OHM,5%,0.25W	01121	CB1025
R1151	315-0100-00			RES.,FXD,CMPSN:10 OHM,5%,0.25W	01121	CB1005
R1152	315-0392-00			RES.,FXD,CMPSN:3.9K OHM,5%,0.25W	01121	CB3925
R1155	315-0103-00			RES.,FXD,CMPSN:10K OHM,5%,0.25W	01121	CB1035
R1157	315-0121-00			RES.,FXD,CMPSN:120 OHM,5%,0.25W	01121	CB1215
R1158	315-0392-00			RES.,FXD,CMPSN:3.9K OHM,5%,0.25W	01121	CB3925
R1159	323-0312-00			RES.,FXD,FILM:17.4K OHM,1%,0.50W	91637	MFF1226G17401F
R1181	311-1227-00			RES.,VAR,NONWIR:5K OHM,20%,0.50W	32997	3386F-T04-502
R1184	311-1235-00			RES.,VAR,NONWIR:100K OHM,20%,0.50W	32997	3386F-T04-104
R1187	315-0363-00			RES.,FXD,CMPSN:36K OHM,5%,0.25W	01121	CB3635
R1188	315-0822-00			RES.,FXD,CMPSN:8.2K OHM,5%,0.25W	01121	CB8225
R1190	311-1227-00			RES.,VAR,NONWIR:5K OHM,20%,0.50W	32997	3386F-T04-502
R1193	311-1235-00			RES.,VAR,NONWIR:100K OHM,20%,0.50W	32997	3386F-T04-104
R1195	315-0183-00	B010100	B089999	RES.,FXD,CMPSN:18K OHM,5%,0.25W	01121	CB1835
R1195	315-0362-00	B090000		RES.,FXD,CMPSN:3.6K OHM,5%,0.25W	01121	CB3625
R1196	315-0183-00	B010100	B089999	RES.,FXD,CMPSN:18K OHM,5%,0.25W	01121	CB1835
R1196	315-0362-00	B090000		RES.,FXD,CMPSN:3.6K OHM,5%,0.25W	01121	CB3625
R1202	315-0102-00	B010100	B359999X	RES.,FXD,CMPSN:1K OHM,5%,0.25W	01121	CB1025
R1204	315-0474-00	B010100	B359999X	RES.,FXD,CMPSN:470K OHM,5%,0.25W	01121	CB4745
R1207	315-0102-00	B010100	B359999X	RES.,FXD,CMPSN:1K OHM,5%,0.25W	01121	CB1025
R1208	315-0104-00	B010100	B359999X	RES.,FXD,CMPSN:100K OHM,5%,0.25W	01121	CB1045
R1210	315-0562-00	B010100	B089999X	RES.,FXD,CMPSN:5.6K OHM,5%,0.25W	01121	CB5625
R1211	315-0562-00	B010100	B359999X	RES.,FXD,CMPSN:5.6K OHM,5%,0.25W	01121	CB5625
R1213	315-0470-03	XB360000		RES.,FXD,CMPSN:47 OHM,5%,0.25W	01121	CB4705
R1214	315-0102-00	B010100	B359999	RES.,FXD,CMPSN:1K OHM,5%,0.25W	01121	CB1025
R1214	315-0472-03	B360000		RES.,FXD,CMPSN:4.7K OHM,5%,0.25W	01121	CB4725
R1223	315-0474-02	XB360000		RES.,FXD,CMPSN:470K OHM,5%,0.25W	01121	CB4745
R1224	306-0333-00	XB160000	B359999	RES.,FXD,CMPSN:33K OHM,10%,2W	01121	HB3331
R1224	315-0101-03	B360000		RES.,FXD,CMPSN:100 OHM,5%,0.25W	01121	CB1015
R1226A R1226B						
R1226C R1226D	307-0386-01	XB360000		RES.,FXD,FILM:HYBRID	80009	307-0386-01
R1227	301-0305-00	B010100	B359999X	RES.,FXD,CMPSN:3M OHM,5%,0.50W	01121	EB3055
R1228	301-0305-00	B010100	B359999X	RES.,FXD,CMPSN:3M OHM,5%,0.50W	01121	EB3055
R1229	301-0305-00	B010100	B359999X	RES.,FXD,CMPSN:3M OHM,5%,0.50W	01121	EB3055
R1230	301-0305-00	B010100	B359999X	RES.,FXD,CMPSN:3M OHM,5%,0.50W	01121	EB3055
R1231	301-0305-00	B010100	B359999X	RES.,FXD,CMPSN:3M OHM,5%,0.50W	01121	EB3055
R1232	315-0103-03	XB360000		RES.,FXD,CMPSN:10K OHM,5%,0.25W	01121	CB1035
R1233	315-0103-03	XB360000		RES.,FXD,CMPSN:10K OHM,5%,0.25W	01121	CB1035
R1234	315-0203-00	B010100	B199999	RES.,FXD,CMPSN:20K OHM,5%,0.25W	01121	CB2035

Ckt No.	Tektronix Part No.	Serial/Model No. Eff	Dscont	Name & Description	Mfr Code	Mfr Part Number
R1234	315-0103-00	B200000	B359999X	RES.,FXD,CMPSN:10K OHM,5%,0.25W	01121	CB1035
R1235	315-0754-03	XB360000		RES.,FXD,CMPSN:750K OHM,5%,0.25W	01121	CB7545
R1236	315-0754-03	XB360000		RES.,FXD,CMPSN:750K OHM,5%,0.25W	01121	CB7545
R1237	315-0103-03	XB360000		RES.,FXD,CMPSN:10K OHM,5%,0.25W	01121	CB1035
R1238	315-0243-03	XB360000		RES.,FXD,CMPSN:24K OHM,5%,0.25W	01121	CB2435
R1239	315-0206-01	XB360000		RES.,FXD,CMPSN:20M OHM,5%,0.25W	01121	CB2065
R1240	315-0103-03	XB360000		RES.,FXD,CMPSN:10K OHM,5%,0.25W	01121	CB1035
R1241	315-0562-00	B010100	B199999	RES.,FXD,CMPSN:5.6K OHM,5%,0.25W	01121	CB5625
R1241	315-0392-00	B200000	B209999	RES.,FXD,CMPSN:3.9K OHM,5%,0.25W	01121	CB3925
R1241	315-0392-00	B210000	B359999X	RES.,FXD,CMPSN:3.9K OHM,5%,0.25W	01121	CB3925
R1242	315-0101-00	B010100	B359999	RES.,FXD,CMPSN:100 OHM,5%,0.25W	01121	CB1015
R1242	311-1257-00	B360000		RES.,VAR,NONWIR:5M OHM,20%,0.50W	32997	3386F-T04-505
R1243	315-0434-00	B010100	B359999X	RES.,FXD,CMPSN:430K OHM,5%,0.25W	01121	CB4345
R1245A						
R1245B	307-0386-01	B010100	B359999X	RES.,FXD,FILM:HYBRID	80009	307-0386-01
R1245C						
R1245D						
R1247	315-0475-00	B010100	B199999	RES.,FXD,CMPSN:4.7M OHM,5%,0.25W	01121	CB4755
R1247	315-0335-00	B200000	B359999X	RES.,FXD,CMPSN:3.3M OHM,5%,0.25W	01121	CB3355
R1248	311-1233-00	XB360000		RES.,VAR,NONWIR:50K OHM,20%,0.50W	32997	3386F-T05-503
R1250	311-1257-00	B010100	B359999	RES.,VAR,NONWIR:5M OHM,20%,0.50W	32997	3386F-T04-505
R1250	315-0103-03	B360000		RES.,FXD,CMPSN:10K OHM,5%,0.25W	01121	CB1035
R1251	315-0103-03	XB360000		RES.,FXD,CMPSN:10K OHM,5%,0.25W	01121	CB1035
R1252	315-0915-00	B010100	B359999	RES.,FXD,CMPSN:9.1M OHM,5%,0.25W	01121	CB9155
R1252	315-0103-03	B360000		RES.,FXD,CMPSN:10K OHM,5%,0.25W	01121	CB1035
R1253	315-0103-00	B010100	B359999	RES.,FXD,CMPSN:10K OHM,5%,0.25W	01121	CB1035
R1253	315-0754-03	B360000		RES.,FXD,CMPSN:750K OHM,5%,0.25W	01121	CB7545
R1254	315-0754-03	XB360000		RES.,FXD,CMPSN:750K OHM,5%,0.25W	01121	CB7545
R1257	315-0105-00	B010100	B199999	RES.,FXD,CMPSN:1M OHM,5%,0.25W	01121	CB1055
R1257	315-0754-00	B200000	B359999	RES.,FXD,CMPSN:750K OHM,5%,0.25W	01121	CB7545
R1257	315-0103-03	B360000		RES.,FXD,CMPSN:10K OHM,5%,0.25W	01121	CB1035
R1258	315-0103-00	B010100	B359999	RES.,FXD,CMPSN:10K OHM,5%,0.25W	01121	CB1035
R1258	315-0243-03	B360000		RES.,FXD,CMPSN:24K OHM,5%,0.25W	01121	CB2435
R1259	315-0103-00	B010100	B359999	RES.,FXD,CMPSN:10K OHM,5%,0.25W	01121	CB1035
R1259	315-0206-01	B360000		RES.,FXD,CMPSN:20M OHM,5%,0.25W	01121	CB2065
R1260	315-0824-02	XB360000		RES.,FXD,CMPSN:820K OHM,5%,0.25W	01121	CB8245
R1261	311-1232-00	B010100	B359999	RES.,VAR,NONWIR:50K OHM,20%,0.50W	32997	3386F-T04-503
R1261	315-0104-03	B360000		RES.,FXD CMPSN:100K OHM,5%,0.25W	01121	CB1045
R1263	315-0103-00	B010100	B359999	RES.,FXD,CMPSN:10K OHM,5%,0.25W	01121	CB1035
R1263	315-0474-02	B360000		RES.,FXD,CMPSN:470K OHM,5%,0.25W	01121	CB4745
R1264	315-0103-00	B010100	B359999	RES.,FXD,CMPSN:10K OHM,5%,0.25W	01121	CB1035
R1264	315-0470-03	B360000		RES.,FXD,CMPSN:47 OHM,5%,0.25W	01121	CB4705
R1266	315-0105-00	B010100	B199999	RES.,FXD,CMPSN:1M OHM,5%,0.25W	01121	CB1055
R1266	315-0754-00	B200000	B359999X	RES.,FXD,CMPSN:750K OHM,5%,0.25W	01121	CB7545
R1270	315-0103-00	B010100	B359999X	RES.,FXD,CMPSN:10K OHM,5%,0.25W	01121	CB1035
R1271	315-0915-00	B010100	B359999X	RES.,FXD,CMPSN:9.1M OHM,5%,0.25W	01121	CB9155
R1274	315-0104-00	B010100	B359999X	RES.,FXD,CMPSN:100K OHM,5%,0.25W	01121	CB1045
R1275	315-0474-00	B010100	B359999X	RES.,FXD,CMPSN:470K OHM,5%,0.25W	01121	CB4745
R1282	315-0103-03	XB360000		RES.,FXD,CMPSN:10K OHM,5%,0.25W	01121	CB1035
R1283	315-0102-03	XB360000		RES.,FXD,CMPSN:1K OHM,5%,0.25W	01121	CB1025
R1284	315-0473-00	XB360000		RES.,FXD,CMPSN:47K OHM,5%,0.25W	01121	CB4735
R1285	315-0474-02	XB360000		RES.,FXD,CMPSN:470K OHM,5%,0.25W	01121	CB4745
R1288	315-0102-03	XB360000		RES.,FXD,CMPSN:1K OHM,5%,0.25W	01121	CB1025
R1289	315-0104-03	XB360000		RES.,FXD CMPSN:100K OHM,5%,0.25W	01121	CB1045
R1292	315-0562-00	XB360000		RES.,FXD,CMPSN:5.6K OHM,5%,0.25W	01121	CB5625
R1305	315-0473-00			RES.,FXD,CMPSN:47K OHM,5%,0.25W	01121	CB4735
R1311	315-0473-00			RES.,FXD,CMPSN:47K OHM,5%,0.25W	01121	CB4735
R1313	315-0473-00	B010100	B049999X	RES.,FXD,CMPSN:47K OHM,5%,0.25W	01121	CB4735
R1318	315-0473-00			RES.,FXD,CMPSN:47K OHM,5%,0.25W	01121	CB4735

Ckt No.	Tektronix Part No.	Serial/Model No. Eff	Dscont	Name & Description	Mfr Code	Mfr Part Number
R1319	315-0201-00	XB320000		RES.,FXD,CMPSN:200 OHM,5%,0.25W	01121	CB2015
R1320	315-0272-00			RES.,FXD,CMPSN:2.7K OHM,5%,0.25W	01121	CB2725
R1320	315-0201-00	XB320000		RES.,FXD,CMPSN:200 OHM,5%,0.25W	01121	CB2015
R1321	315-0223-00			RES.,FXD,CMPSN:22K OHM,5%,0.25W	01121	CB2235
R1323	315-0223-00			RES.,FXD,CMPSN:22K OHM,5%,0.25W	01121	CB2235
R1325	315-0473-00			RES.,FXD,CMPSN:47K OHM,5%,0.25W	01121	CB4735
R1327	315-0473-00			RES.,FXD,CMPSN:47K OHM,5%,0.25W	01121	CB4735
R1329	315-0473-00			RES.,FXD,CMPSN:47K OHM,5%,0.25W	01121	CB4735
R1331	315-0473-00			RES.,FXD,CMPSN:47K OHM,5%,0.25W	01121	CB4735
R1333	315-0472-00			RES.,FXD,CMPSN:4.7K OHM,5%,0.25W	01121	CB4725
R1334	315-0104-00			RES.,FXD,CMPSN:100K OHM,5%,0.25W	01121	CB1045
R1336	315-0472-00			RES.,FXD,CMPSN:4.7K OHM,5%,0.25W	01121	CB4725
R1338	321-0616-00			RES.,FXD,FILM:52.6K OHM,1%,0.125W	91637	MFF1816G52601F
R1340	315-0102-00			RES.,FXD,CMPSN:1K OHM,5%,0.25W	01121	CB1025
R1344	315-0103-00			RES.,FXD,CMPSN:10K OHM,5%,0.25W	01121	CB1035
R1345	315-0103-00			RES.,FXD,CMPSN:10K OHM,5%,0.25W	01121	CB1035
R1350	321-0616-00			RES.,FXD,FILM:52.6K OHM,1%,0.125W	91637	MFF1816G52601F
R1352	315-0102-00			RES.,FXD,CMPSN:1K OHM,5%,0.25W	01121	CB1025
R1353	315-0103-00			RES.,FXD,CMPSN:10K OHM,5%,0.25W	01121	CB1035
R1355	315-0104-00			RES.,FXD,CMPSN:100K OHM,5%,0.25W	01121	CB1045
R1357	315-0102-00			RES.,FXD,CMPSN:1K OHM,5%,0.25W	01121	CB1025
R1363	321-0385-00			RES.,FXD,FILM:100K OHM,1%,0.125W	91637	MFF1816G10002F
R1365	315-0102-00			RES.,FXD,CMPSN:1K OHM,5%,0.25W	01121	CB1025
R1366	315-0103-00			RES.,FXD,CMPSN:10K OHM,5%,0.25W	01121	CB1035
R1368	315-0104-00			RES.,FXD,CMPSN:100K OHM,5%,0.25W	01121	CB1045
R1369	315-0102-00			RES.,FXD,CMPSN:1K OHM,5%,0.25W	01121	CB1025
R1371	315-0473-00			RES.,FXD,CMPSN:47K OHM,5%,0.25W	01121	CB4735
R1372	315-0302-00			RES.,FXD,CMPSN:3K OHM,5%,0.25W	01121	CB3025
R1374	315-0474-00			RES.,FXD,CMPSN:470K OHM,5%,0.25W	01121	CB4745
R1376	315-0273-00			RES.,FXD,CMPSN:27K OHM,5%,0.25W	01121	CB2735
R1378	315-0474-00			RES.,FXD,CMPSN:470K OHM,5%,0.25W	01121	CB4745
R1379	315-0395-00			RES.,FXD,CMPSN:3.9M OHM,5%,0.25W	01121	CB3955
R1384	311-1404-00			RES.,VAR,NONWIR:5K OHM X 5K OHM,20%,1W	01121	18M824
	----- -----			(FURNISHED AS A UNIT WITH R1389 AND S1389)		
R1387	315-0753-00	B010100	B079999	RES.,FXD,CMPSN:75K OHM,5%,0.25W	01121	CB7535
R1387	315-0333-00	B080000		RES.,FXD,CMPSN:33K OHM,5%,0.25W	01121	CB3335
R1389	311-1404-00			RES.,VAR,NONWIR:5K OHM X 5K OHM,20%,1W	01121	18M824
	----- -----			(FURNISHED AS A UNIT WITH R1384 AND S1389)		
R1392	315-0914-00	B010100	B079999	RES.,FXD,CMPSN:910K OHM,5%,0.25W	01121	CB9145
R1392	321-0423-00	B080000		RES.,FXD,FILM:249K OHM,1%,0.125W	91637	MFF1816G24902F
R1394	315-0183-00			RES.,FXD,CMPSN:18K OHM,5%,0.25W	01121	CB1835
R1395	315-0433-00			RES.,FXD,CMPSN:43K OHM,5%,0.25W	01121	CB4335
R1397	315-0683-00			RES.,FXD,CMPSN:68K OHM,5%,0.25W	01121	CB6835
R1399	315-0102-00			RES.,FXD,CMPSN:1K OHM,5%,0.25W	01121	CB1025
R1402	315-0273-00			RES.,FXD,CMPSN:27K OHM,5%,0.25W	01121	CB2735
R1403	315-0122-00			RES.,FXD,CMPSN:1.2K OHM,5%,0.25W	01121	CB1225
R1405	315-0101-00			RES.,FXD,CMPSN:100 OHM,5%,0.25W	01121	CB1015
R1406	315-0474-00	XB080000		RES.,FXD,CMPSN:470K OHM,5%,0.25W	01121	CB4745
R1407	315-0754-00	XB080000		RES.,FXD,CMPSN:750K OHM,5%,0.25W	01121	CB7545
R1408	315-0154-00			RES.,FXD,CMPSN:150K OHM,5%,0.25W	01121	CB1545
R1409	315-0223-00			RES.,FXD,CMPSN:22K OHM,5%,0.25W	01121	CB2235
R1410	315-0203-00	XB080000		RES.,FXD,CMPSN:20K OHM,5%,0.25W	01121	CB2035
R1412	315-0103-00			RES.,FXD,CMPSN:10K OHM,5%,0.25W	01121	CB1035
R1414	315-0102-00			RES.,FXD,CMPSN:1K OHM,5%,0.25W	01121	CB1025
R1416	315-0472-00			RES.,FXD,CMPSN:4.7K OHM,5%,0.25W	01121	CB4725
R1418	315-0222-00			RES.,FXD,CMPSN:2.2K OHM,5%,0.25W	01121	CB2225
R1419	315-0222-00			RES.,FXD,CMPSN:2.2K OHM,5%,0.25W	01121	CB2225
R1421	315-0472-00			RES.,FXD,CMPSN:4.7K OHM,5%,0.25W	01121	CB4725
R1422	315-0103-00			RES.,FXD,CMPSN:10K OHM,5%,0.25W	01121	CB1035

Ckt No.	Tektronix Part No.	Serial/Model No. Eff	Dscont	Name & Description	Mfr Code	Mfr Part Number
R1425	315-0473-00			RES.,FXD,CMPSN:47K OHM,5%,0.25W	01121	CB4735
R1430	315-0104-00			RES.,FXD,CMPSN:100K OHM,5%,0.25W	01121	CB1045
R1434	315-0104-00			RES.,FXD,CMPSN:100K OHM,5%,0.25W	01121	CB1045
R1435	315-0102-00			RES.,FXD,CMPSN:1K OHM,5%,0.25W	01121	CB1025
R1437	315-0561-00			RES.,FXD,CMPSN:560 OHM,5%,0.25W	01121	CB5615
R1438	315-0203-00			RES.,FXD,CMPSN:20K OHM,5%,0.25W	01121	CB2035
R1440	315-0223-00			RES.,FXD,CMPSN:22K OHM,5%,0.25W	01121	CB2235
R1445	321-0400-00			RES.,FXD,FILM:143K OHM,1%,0.125W	91637	MFF1816G14302F
R1446	321-0385-00			RES.,FXD,FILM:100K OHM,1%,0.125W	91637	MFF1816G10002F
R1448	315-0154-00			RES.,FXD,CMPSN:150K OHM,5%,0.25W	01121	CB1545
R1451	315-0103-00			RES.,FXD,CMPSN:10K OHM,5%,0.25W	01121	CB1035
R1453	315-0102-00			RES.,FXD,CMPSN:1K OHM,5%,0.25W	01121	CB1025
R1455	315-0222-00			RES.,FXD,CMPSN:2.2K OHM,5%,0.25W	01121	CB2225
R1457	315-0103-00			RES.,FXD,CMPSN:10K OHM,5%,0.25W	01121	CB1035
R1459	315-0103-00			RES.,FXD,CMPSN:10K OHM,5%,0.25W	01121	CB1035
R1460	315-0103-00			RES.,FXD,CMPSN:10K OHM,5%,0.25W	01121	CB1035
R1462	315-0472-00			RES.,FXD,CMPSN:4.7K OHM,5%,0.25W	01121	CB4725
R1464	315-0223-00			RES.,FXD,CMPSN:22K OHM,5%,0.25W	01121	CB2235
R1465	315-0223-00			RES.,FXD,CMPSN:22K OHM,5%,0.25W	01121	CB2235
R1467	311-1228-00			RES.,VAR,NONWIR:10K OHM,20%,0.50W	32997	3386F-T04-103
R1469	321-0356-00			RES.,FXD,FILM:49.9K OHM,1%,0.125W	91637	MFF1816G49901F
R1471	321-0356-00			RES.,FXD,FILM:49.9K OHM,1%,0.125W	91637	MFF1816G49901F
R1473	311-1228-00			RES.,VAR,NONWIR:10K OHM,20%,0.50W	32997	3386F-T04-103
R1475	321-0444-00			RES.,FXD,FILM:412K OHM,1%,0.125W	91637	MFF1816G41202F
R1477	311-0125-00	B010100	B179999	RES.,VAR,NONWIR:50K OHM,20%,0.2W	12697	381-CM25340
R1477	311-0164-00	B180000		RES.,VAR,NONWIR:50K OHM,10%,0.50W	12697	381-CM30277
R1482	315-0103-00			RES.,FXD,CMPSN:10K OHM,5%,0.25W	01121	CB1035
R1484	315-0103-00			RES.,FXD,CMPSN:10K OHM,5%,0.25W	01121	CB1035
R1486	321-0406-00			RES.,FXD,FILM:165K OHM,1%,0.125W	91637	MFF1816G16502F
R1493	315-0392-00			RES.,FXD,CMPSN:3.9K OHM,5%,0.25W	01121	CB3925
R1494	315-0102-00			RES.,FXD,CMPSN:1K OHM,5%,0.25W	01121	CB1025
R1496	321-0414-00			RES.,FXD,FILM:200K OHM,1%,0.125W	91637	MFF1816G20002F
R1498	315-0392-00			RES.,FXD,CMPSN:3.9K OHM,5%,0.25W	01121	CB3925
R1499	315-0472-00			RES.,FXD,CMPSN:4.7K OHM,5%,0.25W	01121	CB4725
R1501	301-0393-00			RES.,FXD,CMPSN:39K OHM,5%,0.50W	01121	EB3935
R1502	301-0203-00			RES.,FXD,CMPSN:20K OHM,5%,0.50W	01121	EB2035
R1505	315-0101-00			RES.,FXD,CMPSN:100 OHM,5%,0.25W	01121	CB1015
R1507	321-0405-00			RES.,FXD,FILM:162K OHM,1%,0.125W	91637	MFF1816G16202F
R1510	321-0362-00			RES.,FXD,FILM:57.6K OHM,1%,0.125W	91637	MFF1816G57601F
R1511	321-0414-00			RES.,FXD,FILM:200K OHM,1%,0.125W	91637	MFF1816G20002F
R1513	315-0754-00			RES.,FXD,CMPSN:750K OHM,5%,0.25W	01121	CB7545
R1520	321-1381-03			RES.,FXD,FILM:92K OHM,0.25%,0.125W	91637	MFF1816D92001C
R1521	311-1232-00			RES.,VAR,NONWIR:50K OHM,20%,0.50W	32997	3386F-T04-503
R1522	321-0373-00			RES.,FXD,FILM:75K OHM, 1%,0.125W	91637	MFF1816G75001F
R1525	315-0474-00			RES.,FXD,CMPSN:470K OHM,5%,0.25W	01121	CB4745
R1531	311-1232-00			RES.,VAR,NONWIR:50K OHM,20%,0.50W	32997	3386F-T04-503
R1533	321-0385-00			RES.,FXD,FILM:100K OHM,1%,0.125W	91637	MFF1816G10002F
R1534	321-0378-00			RES.,FXD,FILM:84.5K OHM,1%,0.125W	91637	MFF1816G84501F
R1536	321-0385-00			RES.,FXD,FILM:100K OHM,1%,0.125W	91637	MFF1816G10002F
R1538	315-0184-00			RES.,FXD,CMPSN:180K OHM,5%,0.25W	01121	CB1845
R1545	308-0290-00			RES.,FXD,WW:8 OHM,5%,5W	91637	CW2A-8R000J
R1587	315-0470-00			RES.,FXD,CMPSN:47 OHM,5%,0.25W	01121	CB4705
R1589	315-0220-00			RES.,FXD,CMPSN:22 OHM,5%,0.25W	01121	CB2205
R1591	307-0106-00			RES.,FXD,CMPSN:4.7 OHM,5%,0.25W	01121	CB47G5
R1593	307-0103-00			RES.,FXD,CMPSN:2.7 OHM,5%,0.25W	01121	CB27G5
R1595	307-0106-00			RES.,FXD,CMPSN:4.7 OHM,5%,0.25W	01121	CB47G5
R1597	315-0220-00			RES.,FXD,CMPSN:22 OHM,5%,0.25W	01121	CB2205
R2101	315-0682-00			RES.,FXD,CMPSN:6.8K OHM,5%,0.25W	01121	CB6825
R2102	315-0103-00			RES.,FXD,CMPSN:10K OHM,5%,0.25W	01121	CB1035

Ckt No.	Tektronix Part No.	Serial/Model No. Eff	Dscont	Name & Description	Mfr Code	Mfr Part Number
R2104	315-0333-00			RES.,FXD,CMPSN:33K OHM,5%,0.25W	01121	CB3335
R2105	315-0153-00			RES.,FXD,CMPSN:15K OHM,5%,0.25W	01121	CB1535
R2107	315-0510-00			RES.,FXD,CMPSN:51 OHM,5%,0.25W	01121	CB5105
R2108	315-0512-00			RES.,FXD,CMPSN:5.1K OHM,5%,0.25W	01121	CB5125
R2109	315-0221-00			RES.,FXD,CMPSN:220 OHM,5%,0.25W	01121	CB2215
R2112	315-0102-00			RES.,FXD,CMPSN:1K OHM,5%,0.25W	01121	CB1025
R2113	315-0301-00			RES.,FXD,CMPSN:300 OHM,5%,0.25W	01121	CB3015
R2122	315-0432-00			RES.,FXD,CMPSN:4.3K OHM,5%,0.25W	01121	CB4325
R2123	315-0683-00			RES.,FXD,CMPSN:68K OHM,5%,0.25W	01121	CB6835
R2127	315-0302-00			RES.,FXD,CMPSN:3K OHM,5%,0.25W	01121	CB3025
R2128	311-1225-00	B010100	B219999	RES.,VAR,NONWIR:1K OHM,20%,0.50W	32997	3386F-T04-102
R2128	311-1263-00	B220000		RES.,VAR,NONWIR:1K OHM,10%,0.50W	32997	3329P-L58-102
R2129	315-0183-00			RES.,FXD,CMPSN:18K OHM,5%,0.25W	01121	CB1835
R2135	315-0393-00			RES.,FXD,CMPSN:39K OHM,5%,0.25W	01121	CB3935
R2137	315-0752-00			RES.,FXD,CMPSN:7.5K OHM,5%,0.25W	01121	CB7525
R2139	315-0242-00			RES.,FXD,CMPSN:2.4K OHM,5%,0.25W	01121	CB2425
R2144	315-0104-00			RES.,FXD,CMPSN:100K OHM,5%,0.25W	01121	CB1045
R2146	315-0152-00			RES.,FXD,CMPSN:1.5K OHM,5%,0.25W	01121	CB1525
R2148	315-0103-00			RES.,FXD,CMPSN:10K OHM,5%,0.25W	01121	CB1035
R2150	321-0403-00			RES.,FXD,FILM:154K OHM,1%,0.125W	91637	MFF1816G15402F
R2151	321-0372-00			RES.,FXD,FILM:73.2K OHM,1%,0.125W	91637	MFF1816G73201F
R2153	315-0103-00			RES.,FXD,CMPSN:10K OHM,5%,0.25W	01121	CB1035
R2155	315-0512-00			RES.,FXD,CMPSN:5.1K OHM,5%,0.25W	01121	CB5125
R2158	315-0152-00			RES.,FXD,CMPSN:1.5K OHM,5%,0.25W	01121	CB1525
R2161	315-0102-00			RES.,FXD,CMPSN:1K OHM,5%,0.25W	01121	CB1025
R2162	315-0751-00			RES.,FXD,CMPSN:750 OHM,5%,0.25W	01121	CB7515
R2163	315-0751-00			RES.,FXD,CMPSN:750 OHM,5%,0.25W	01121	CB7515
R2165	315-0102-00			RES.,FXD,CMPSN:1K OHM,5%,0.25W	01121	CB1025
R2166	315-0751-00			RES.,FXD,CMPSN:750 OHM,5%,0.25W	01121	CB7515
R2167	315-0751-00			RES.,FXD,CMPSN:750 OHM,5%,0.25W	01121	CB7515
R2169	315-0102-00			RES.,FXD,CMPSN:1K OHM,5%,0.25W	01121	CB1025
R2170	315-0751-00			RES.,FXD,CMPSN:750 OHM,5%,0.25W	01121	CB7515
R2171	315-0751-00			RES.,FXD,CMPSN:750 OHM,5%,0.25W	01121	CB7515
R2173	315-0102-00			RES.,FXD,CMPSN:1K OHM,5%,0.25W	01121	CB1025
R2174	315-0751-00			RES.,FXD,CMPSN:750 OHM,5%,0.25W	01121	CB7515
R2175	315-0751-00			RES.,FXD,CMPSN:750 OHM,5%,0.25W	01121	CB7515
R2177	315-0511-00			RES.,FXD,CMPSN:510 OHM,5%,0.25W	01121	CB5115
R2178	315-0511-00			RES.,FXD,CMPSN:510 OHM,5%,0.25W	01121	CB5115
R2179	315-0511-00			RES.,FXD,CMPSN:510 OHM,5%,0.25W	01121	CB5115
R2182	321-0262-00			RES.,FXD,FILM:5.23K OHM,1%,0.125W	91637	MFF1816G52300F
R2183	311-1224-00			RES.,VAR,NONWIR:500 OHM,20%,0.50W	32997	3386F-T04-501
R2191	315-0513-00			RES.,FXD,CMPSN:51K OHM,5%,0.25W	01121	CB5135
R2192	315-0133-00			RES.,FXD,CMPSN:13K OHM,5%,0.25W	01121	CB1335
R2193	315-0133-00			RES.,FXD,CMPSN:13K OHM,5%,0.25W	01121	CB1335
R2194	315-0753-00			RES.,FXD,CMPSN:75K OHM,5%,0.25W	01121	CB7535
R2196	321-0308-00			RES.,FXD,FILM:15.8K OHM,1%,0.125W	91637	MFF1816G15801F
R2197	315-0513-00			RES.,FXD,CMPSN:51K OHM,5%,0.25W	01121	CB5135
R2198	321-0319-00			RES.,FXD,FILM:20.5K OHM,1%,0.125W	91637	MFF1816G20501F
R2199	321-0335-00			RES.,FXD,FILM:30.1K OHM,1%,0.125W	91637	MFF1816G30101F
R2201	315-0154-00			RES.,FXD,CMPSN:150K OHM,5%,0.25W	01121	CB1545
R2202	321-0335-00			RES.,FXD,FILM:30.1K OHM,1%,0.125W	91637	MFF1816G30101F
R2203	321-0344-00			RES.,FXD,FILM:37.4K OHM,1%,0.125W	91637	MFF1816G37401F
R2204	321-0335-00			RES.,FXD,FILM:30.1K OHM,1%,0.125W	91637	MFF1816G30101F
R2206	315-0513-00			RES.,FXD,CMPSN:51K OHM,5%,0.25W	01121	CB5135
R2207	315-0154-00			RES.,FXD,CMPSN:150K OHM,5%,0.25W	01121	CB1545
R2208	321-0335-00			RES.,FXD,FILM:30.1K OHM,1%,0.125W	91637	MFF1816G30101F
R2209	321-0335-00			RES.,FXD,FILM:30.1K OHM,1%,0.125W	91637	MFF1816G30101F
R2211	315-0752-00			RES.,FXD,CMPSN:7.5K OHM,5%,0.25W	01121	CB7525
R2213	321-0259-00			RES.,FXD,FILM:4.87K OHM,1%,0.125W	91637	MFF1816G48700F

Ckt No.	Tektronix Part No.	Serial/Model No. Eff	Dscont	Name & Description	Mfr Code	Mfr Part Number
R1234	315-0103-00	B200000	B359999X	RES.,FXD,CMPSN:10K OHM,5%,0.25W	01121	CB1035
R1235	315-0754-03	XB360000		RES.,FXD,CMPSN:750K OHM,5%,0.25W	01121	CB7545
R1236	315-0754-03	XB360000		RES.,FXD,CMPSN:750K OHM,5%,0.25W	01121	CB7545
R1237	315-0103-03	XB360000		RES.,FXD,CMPSN:10K OHM,5%,0.25W	01121	CB1035
R1238	315-0243-03	XB360000		RES.,FXD,CMPSN:24K OHM,5%,0.25W	01121	CB2435
R1239	315-0206-01	XB360000		RES.,FXD,CMPSN:20M OHM,5%,0.25W	01121	CB2065
R1240	315-0103-03	XB360000		RES.,FXD,CMPSN:10K OHM,5%,0.25W	01121	CB1035
R1241	315-0562-00	B010100	B199999	RES.,FXD,CMPSN:5.6K OHM,5%,0.25W	01121	CB5625
R1241	315-0392-00	B200000	B209999	RES.,FXD,CMPSN:3.9K OHM,5%,0.25W	01121	CB3925
R1241	315-0392-00	B210000	B359999X	RES.,FXD,CMPSN:3.9K OHM,5%,0.25W	01121	CB3925
R1242	315-0101-00	B010100	B359999	RES.,FXD,CMPSN:100 OHM,5%,0.25W	01121	CB1015
R1242	311-1257-00	B360000		RES.,VAR,NONWIR:5M OHM,20%,0.50W	32997	3386F-T04-505
R1243	315-0434-00	B010100	B359999X	RES.,FXD,CMPSN:430K OHM,5%,0.25W	01121	CB4345
R1245A						
R1245B	307-0386-01	B010100	B359999X	RES.,FXD,FILM:HYBRID	80009	307-0386-01
R1245C						
R1245D						
R1247	315-0475-00	B010100	B199999	RES.,FXD,CMPSN:4.7M OHM,5%,0.25W	01121	CB4755
R1247	315-0335-00	B200000	B359999X	RES.,FXD,CMPSN:3.3M OHM,5%,0.25W	01121	CB3355
R1248	311-1233-00	XB360000		RES.,VAR,NONWIR:50K OHM,20%,0.50W	32997	3386F-T05-503
R1250	311-1257-00	B010100	B359999	RES.,VAR,NONWIR:5M OHM,20%,0.50W	32997	3386F-T04-505
R1250	315-0103-03	B360000		RES.,FXD,CMPSN:10K OHM,5%,0.25W	01121	CB1035
R1251	315-0103-03	XB360000		RES.,FXD,CMPSN:10K OHM,5%,0.25W	01121	CB1035
R1252	315-0915-00	B010100	B359999	RES.,FXD,CMPSN:9.1M OHM,5%,0.25W	01121	CB9155
R1252	315-0103-03	B360000		RES.,FXD,CMPSN:10K OHM,5%,0.25W	01121	CB1035
R1253	315-0103-00	B010100	B359999	RES.,FXD,CMPSN:10K OHM,5%,0.25W	01121	CB1035
R1253	315-0754-03	B360000		RES.,FXD,CMPSN:750K OHM,5%,0.25W	01121	CB7545
R1254	315-0754-03	XB360000		RES.,FXD,CMPSN:750K OHM,5%,0.25W	01121	CB7545
R1257	315-0105-00	B010100	B199999	RES.,FXD,CMPSN:1M OHM,5%,0.25W	01121	CB1055
R1257	315-0754-00	B200000	B359999	RES.,FXD,CMPSN:750K OHM,5%,0.25W	01121	CB7545
R1257	315-0103-03	B360000		RES.,FXD,CMPSN:10K OHM,5%,0.25W	01121	CB1035
R1258	315-0103-00	B010100	B359999	RES.,FXD,CMPSN:10K OHM,5%,0.25W	01121	CB1035
R1258	315-0243-03	B360000		RES.,FXD,CMPSN:24K OHM,5%,0.25W	01121	CB2435
R1259	315-0103-00	B010100	B359999	RES.,FXD,CMPSN:10K OHM,5%,0.25W	01121	CB1035
R1259	315-0206-01	B360000		RES.,FXD,CMPSN:20M OHM,5%,0.25W	01121	CB2065
R1260	315-0824-02	XB360000		RES.,FXD,CMPSN:820K OHM,5%,0.25W	01121	CB8245
R1261	311-1232-00	B010100	B359999	RES.,VAR,NONWIR:50K OHM,20%,0.50W	32997	3386F-T04-503
R1261	315-0104-03	B360000		RES.,FXD CMPSN:100K OHM,5%,0.25W	01121	CB1045
R1263	315-0103-00	B010100	B359999	RES.,FXD,CMPSN:10K OHM,5%,0.25W	01121	CB1035
R1263	315-0474-02	B360000		RES.,FXD,CMPSN:470K OHM,5%,0.25W	01121	CB4745
R1264	315-0103-00	B010100	B359999	RES.,FXD,CMPSN:10K OHM,5%,0.25W	01121	CB1035
R1264	315-0470-03	B360000		RES.,FXD,CMPSN:47 OHM,5%,0.25W	01121	CB4705
R1266	315-0105-00	B010100	B199999	RES.,FXD,CMPSN:1M OHM,5%,0.25W	01121	CB1055
R1266	315-0754-00	B200000	B359999X	RES.,FXD,CMPSN:750K OHM,5%,0.25W	01121	CB7545
R1270	315-0103-00	B010100	B359999X	RES.,FXD,CMPSN:10K OHM,5%,0.25W	01121	CB1035
R1271	315-0915-00	B010100	B359999X	RES.,FXD,CMPSN:9.1M OHM,5%,0.25W	01121	CB9155
R1274	315-0104-00	B010100	B359999X	RES.,FXD,CMPSN:100K OHM,5%,0.25W	01121	CB1045
R1275	315-0474-00	B010100	B359999X	RES.,FXD,CMPSN:470K OHM,5%,0.25W	01121	CB4745
R1282	315-0103-03	XB360000		RES.,FXD,CMPSN:10K OHM,5%,0.25W	01121	CB1035
R1283	315-0102-03	XB360000		RES.,FXD,CMPSN:1K OHM,5%,0.25W	01121	CB1025
R1284	315-0473-00	XB360000		RES.,FXD,CMPSN:47K OHM,5%,0.25W	01121	CB4735
R1285	315-0474-02	XB360000		RES.,FXD,CMPSN:470K OHM,5%,0.25W	01121	CB4745
R1288	315-0102-03	XB360000		RES.,FXD,CMPSN:1K OHM,5%,0.25W	01121	CB1025
R1289	315-0104-03	XB360000		RES.,FXD CMPSN:100K OHM,5%,0.25W	01121	CB1045
R1292	315-0562-00	XB360000		RES.,FXD,CMPSN:5.6K OHM,5%,0.25W	01121	CB5625
R1305	315-0473-00			RES.,FXD,CMPSN:47K OHM,5%,0.25W	01121	CB4735
R1311	315-0473-00			RES.,FXD,CMPSN:47K OHM,5%,0.25W	01121	CB4735
R1313	315-0473-00	B010100	B049999X	RES.,FXD,CMPSN:47K OHM,5%,0.25W	01121	CB4735
R1318	315-0473-00			RES.,FXD,CMPSN:47K OHM,5%,0.25W	01121	CB4735

Ckt No.	Tektronix Part No.	Serial/Model No. Eff	Dscont	Name & Description	Mfr Code	Mfr Part Number
R1319	315-0201-00	XB320000		RES.,FXD,CMPSN:200 OHM,5%,0.25W	01121	CB2015
R1320	315-0272-00			RES.,FXD,CMPSN:2.7K OHM,5%,0.25W	01121	CB2725
R1320	315-0201-00	XB320000		RES.,FXD,CMPSN:200 OHM,5%,0.25W	01121	CB2015
R1321	315-0223-00			RES.,FXD,CMPSN:22K OHM,5%,0.25W	01121	CB2235
R1323	315-0223-00			RES.,FXD,CMPSN:22K OHM,5%,0.25W	01121	CB2235
R1325	315-0473-00			RES.,FXD,CMPSN:47K OHM,5%,0.25W	01121	CB4735
R1327	315-0473-00			RES.,FXD,CMPSN:47K OHM,5%,0.25W	01121	CB4735
R1329	315-0473-00			RES.,FXD,CMPSN:47K OHM,5%,0.25W	01121	CB4735
R1331	315-0473-00			RES.,FXD,CMPSN:47K OHM,5%,0.25W	01121	CB4735
R1333	315-0472-00			RES.,FXD,CMPSN:4.7K OHM,5%,0.25W	01121	CB4725
R1334	315-0104-00			RES.,FXD,CMPSN:100K OHM,5%,0.25W	01121	CB1045
R1336	315-0472-00			RES.,FXD,CMPSN:4.7K OHM,5%,0.25W	01121	CB4725
R1338	321-0616-00			RES.,FXD,FILM:52.6K OHM,1%,0.125W	91637	MFF1816G52601F
R1340	315-0102-00			RES.,FXD,CMPSN:1K OHM,5%,0.25W	01121	CB1025
R1344	315-0103-00			RES.,FXD,CMPSN:10K OHM,5%,0.25W	01121	CB1035
R1345	315-0103-00			RES.,FXD,CMPSN:10K OHM,5%,0.25W	01121	CB1035
R1350	321-0616-00			RES.,FXD,FILM:52.6K OHM,1%,0.125W	91637	MFF1816G52601F
R1352	315-0102-00			RES.,FXD,CMPSN:1K OHM,5%,0.25W	01121	CB1025
R1353	315-0103-00			RES.,FXD,CMPSN:10K OHM,5%,0.25W	01121	CB1035
R1355	315-0104-00			RES.,FXD,CMPSN:100K OHM,5%,0.25W	01121	CB1045
R1357	315-0102-00			RES.,FXD,CMPSN:1K OHM,5%,0.25W	01121	CB1025
R1363	321-0385-00			RES.,FXD,FILM:100K OHM,1%,0.125W	91637	MFF1816G10002F
R1365	315-0102-00			RES.,FXD,CMPSN:1K OHM,5%,0.25W	01121	CB1025
R1366	315-0103-00			RES.,FXD,CMPSN:10K OHM,5%,0.25W	01121	CB1035
R1368	315-0104-00			RES.,FXD,CMPSN:100K OHM,5%,0.25W	01121	CB1045
R1369	315-0102-00			RES.,FXD,CMPSN:1K OHM,5%,0.25W	01121	CB1025
R1371	315-0473-00			RES.,FXD,CMPSN:47K OHM,5%,0.25W	01121	CB4735
R1372	315-0302-00			RES.,FXD,CMPSN:3K OHM,5%,0.25W	01121	CB3025
R1374	315-0474-00			RES.,FXD,CMPSN:470K OHM,5%,0.25W	01121	CB4745
R1376	315-0273-00			RES.,FXD,CMPSN:27K OHM,5%,0.25W	01121	CB2735
R1378	315-0474-00			RES.,FXD,CMPSN:470K OHM,5%,0.25W	01121	CB4745
R1379	315-0395-00			RES.,FXD,CMPSN:3.9M OHM,5%,0.25W	01121	CB3955
R1384	311-1404-00			RES.,VAR,NONWIR:5K OHM X 5K OHM,20%,1W	01121	18M824
	----- -----			(FURNISHED AS A UNIT WITH R1389 AND S1389)		
R1387	315-0753-00	B010100	B079999	RES.,FXD,CMPSN:75K OHM,5%,0.25W	01121	CB7535
R1387	315-0333-00	B080000		RES.,FXD,CMPSN:33K OHM,5%,0.25W	01121	CB3335
R1389	311-1404-00			RES.,VAR,NONWIR:5K OHM X 5K OHM,20%,1W	01121	18M824
	----- -----			(FURNISHED AS A UNIT WITH R1384 AND S1389)		
R1392	315-0914-00	B010100	B079999	RES.,FXD,CMPSN:910K OHM,5%,0.25W	01121	CB9145
R1392	321-0423-00	B080000		RES.,FXD,FILM:249K OHM,1%,0.125W	91637	MFF1816G24902F
R1394	315-0183-00			RES.,FXD,CMPSN:18K OHM,5%,0.25W	01121	CB1835
R1395	315-0433-00			RES.,FXD,CMPSN:43K OHM,5%,0.25W	01121	CB4335
R1397	315-0683-00			RES.,FXD,CMPSN:68K OHM,5%,0.25W	01121	CB6835
R1399	315-0102-00			RES.,FXD,CMPSN:1K OHM,5%,0.25W	01121	CB1025
R1402	315-0273-00			RES.,FXD,CMPSN:27K OHM,5%,0.25W	01121	CB2735
R1403	315-0122-00			RES.,FXD,CMPSN:1.2K OHM,5%,0.25W	01121	CB1225
R1405	315-0101-00			RES.,FXD,CMPSN:100 OHM,5%,0.25W	01121	CB1015
R1406	315-0474-00	XB080000		RES.,FXD,CMPSN:470K OHM,5%,0.25W	01121	CB4745
R1407	315-0754-00	XB080000		RES.,FXD,CMPSN:750K OHM,5%,0.25W	01121	CB7545
R1408	315-0154-00			RES.,FXD,CMPSN:150K OHM,5%,0.25W	01121	CB1545
R1409	315-0223-00			RES.,FXD,CMPSN:22K OHM,5%,0.25W	01121	CB2235
R1410	315-0203-00	XB080000		RES.,FXD,CMPSN:20K OHM,5%,0.25W	01121	CB2035
R1412	315-0103-00			RES.,FXD,CMPSN:10K OHM,5%,0.25W	01121	CB1035
R1414	315-0102-00			RES.,FXD,CMPSN:1K OHM,5%,0.25W	01121	CB1025
R1416	315-0472-00			RES.,FXD,CMPSN:4.7K OHM,5%,0.25W	01121	CB4725
R1418	315-0222-00			RES.,FXD,CMPSN:2.2K OHM,5%,0.25W	01121	CB2225
R1419	315-0222-00			RES.,FXD,CMPSN:2.2K OHM,5%,0.25W	01121	CB2225
R1421	315-0472-00			RES.,FXD,CMPSN:4.7K OHM,5%,0.25W	01121	CB4725
R1422	315-0103-00			RES.,FXD,CMPSN:10K OHM,5%,0.25W	01121	CB1035

Ckt No.	Tektronix Part No.	Serial/Model No. Eff	Dscont	Name & Description	Mfr Code	Mfr Part Number
R1425	315-0473-00			RES.,FXD,CMPSN:47K OHM,5%,0.25W	01121	CB4735
R1430	315-0104-00			RES.,FXD,CMPSN:100K OHM,5%,0.25W	01121	CB1045
R1434	315-0104-00			RES.,FXD,CMPSN:100K OHM,5%,0.25W	01121	CB1045
R1435	315-0102-00			RES.,FXD,CMPSN:1K OHM,5%,0.25W	01121	CB1025
R1437	315-0561-00			RES.,FXD,CMPSN:560 OHM,5%,0.25W	01121	CB5615
R1438	315-0203-00			RES.,FXD,CMPSN:20K OHM,5%,0.25W	01121	CB2035
R1440	315-0223-00			RES.,FXD,CMPSN:22K OHM,5%,0.25W	01121	CB2235
R1445	321-0400-00			RES.,FXD,FILM:143K OHM,1%,0.125W	91637	MFF1816G14302F
R1446	321-0385-00			RES.,FXD,FILM:100K OHM,1%,0.125W	91637	MFF1816G10002F
R1448	315-0154-00			RES.,FXD,CMPSN:150K OHM,5%,0.25W	01121	CB1545
R1451	315-0103-00			RES.,FXD,CMPSN:10K OHM,5%,0.25W	01121	CB1035
R1453	315-0102-00			RES.,FXD,CMPSN:1K OHM,5%,0.25W	01121	CB1025
R1455	315-0222-00			RES.,FXD,CMPSN:2.2K OHM,5%,0.25W	01121	CB2225
R1457	315-0103-00			RES.,FXD,CMPSN:10K OHM,5%,0.25W	01121	CB1035
R1459	315-0103-00			RES.,FXD,CMPSN:10K OHM,5%,0.25W	01121	CB1035
R1460	315-0103-00			RES.,FXD,CMPSN:10K OHM,5%,0.25W	01121	CB1035
R1462	315-0472-00			RES.,FXD,CMPSN:4.7K OHM,5%,0.25W	01121	CB4725
R1464	315-0223-00			RES.,FXD,CMPSN:22K OHM,5%,0.25W	01121	CB2235
R1465	315-0223-00			RES.,FXD,CMPSN:22K OHM,5%,0.25W	01121	CB2235
R1467	311-1228-00			RES.,VAR,NONWIR:10K OHM,20%,0.50W	32997	3386F-T04-103
R1469	321-0356-00			RES.,FXD,FILM:49.9K OHM,1%,0.125W	91637	MFF1816G49901F
R1471	321-0356-00			RES.,FXD,FILM:49.9K OHM,1%,0.125W	91637	MFF1816G49901F
R1473	311-1228-00			RES.,VAR,NONWIR:10K OHM,20%,0.50W	32997	3386F-T04-103
R1475	321-0444-00			RES.,FXD,FILM:412K OHM,1%,0.125W	91637	MFF1816G41202F
R1477	311-0125-00	B010100	B179999	RES.,VAR,NONWIR:50K OHM,20%,0.2W	12697	381-CM25340
R1477	311-0164-00	B180000		RES.,VAR,NONWIR:50K OHM,10%,0.50W	12697	381-CM30277
R1482	315-0103-00			RES.,FXD,CMPSN:10K OHM,5%,0.25W	01121	CB1035
R1484	315-0103-00			RES.,FXD,CMPSN:10K OHM,5%,0.25W	01121	CB1035
R1486	321-0406-00			RES.,FXD,FILM:165K OHM,1%,0.125W	91637	MFF1816G16502F
R1493	315-0392-00			RES.,FXD,CMPSN:3.9K OHM,5%,0.25W	01121	CB3925
R1494	315-0102-00			RES.,FXD,CMPSN:1K OHM,5%,0.25W	01121	CB1025
R1496	321-0414-00			RES.,FXD,FILM:200K OHM,1%,0.125W	91637	MFF1816G20002F
R1498	315-0392-00			RES.,FXD,CMPSN:3.9K OHM,5%,0.25W	01121	CB3925
R1499	315-0472-00			RES.,FXD,CMPSN:4.7K OHM,5%,0.25W	01121	CB4725
R1501	301-0393-00			RES.,FXD,CMPSN:39K OHM,5%,0.50W	01121	EB3935
R1502	301-0203-00			RES.,FXD,CMPSN:20K OHM,5%,0.50W	01121	EB2035
R1505	315-0101-00			RES.,FXD,CMPSN:100 OHM,5%,0.25W	01121	CB1015
R1507	321-0405-00			RES.,FXD,FILM:162K OHM,1%,0.125W	91637	MFF1816G16202F
R1510	321-0362-00			RES.,FXD,FILM:57.6K OHM,1%,0.125W	91637	MFF1816G57601F
R1511	321-0414-00			RES.,FXD,FILM:200K OHM,1%,0.125W	91637	MFF1816G20002F
R1513	315-0754-00			RES.,FXD,CMPSN:750K OHM,5%,0.25W	01121	CB7545
R1520	321-1381-03			RES.,FXD,FILM:92K OHM,0.25%,0.125W	91637	MFF1816D92001C
R1521	311-1232-00			RES.,VAR,NONWIR:50K OHM,20%,0.50W	32997	3386F-T04-503
R1522	321-0373-00			RES.,FXD,FILM:75K OHM, 1%,0.125W	91637	MFF1816G75001F
R1525	315-0474-00			RES.,FXD,CMPSN:470K OHM,5%,0.25W	01121	CB4745
R1531	311-1232-00			RES.,VAR,NONWIR:50K OHM,20%,0.50W	32997	3386F-T04-503
R1533	321-0385-00			RES.,FXD,FILM:100K OHM,1%,0.125W	91637	MFF1816G10002F
R1534	321-0378-00			RES.,FXD,FILM:84.5K OHM,1%,0.125W	91637	MFF1816G84501F
R1536	321-0385-00			RES.,FXD,FILM:100K OHM,1%,0.125W	91637	MFF1816G10002F
R1538	315-0184-00			RES.,FXD,CMPSN:180K OHM,5%,0.25W	01121	CB1845
R1545	308-0290-00			RES.,FXD,WW:8 OHM,5%,5W	91637	CW2A-8R000J
R1587	315-0470-00			RES.,FXD,CMPSN:47 OHM,5%,0.25W	01121	CB4705
R1589	315-0220-00			RES.,FXD,CMPSN:22 OHM,5%,0.25W	01121	CB2205
R1591	307-0106-00			RES.,FXD,CMPSN:4.7 OHM,5%,0.25W	01121	CB47G5
R1593	307-0103-00			RES.,FXD,CMPSN:2.7 OHM,5%,0.25W	01121	CB27G5
R1595	307-0106-00			RES.,FXD,CMPSN:4.7 OHM,5%,0.25W	01121	CB47G5
R1597	315-0220-00			RES.,FXD,CMPSN:22 OHM,5%,0.25W	01121	CB2205
R2101	315-0682-00			RES.,FXD,CMPSN:6.8K OHM,5%,0.25W	01121	CB6825
R2102	315-0103-00			RES.,FXD,CMPSN:10K OHM,5%,0.25W	01121	CB1035

Ckt No.	Tektronix Part No.	Serial/Model No. Eff	Dscont	Name & Description	Mfr Code	Mfr Part Number
R2104	315-0333-00			RES.,FXD,CMPSN:33K OHM,5%,0.25W	01121	CB3335
R2105	315-0153-00			RES.,FXD,CMPSN:15K OHM,5%,0.25W	01121	CB1535
R2107	315-0510-00			RES.,FXD,CMPSN:51 OHM,5%,0.25W	01121	CB5105
R2108	315-0512-00			RES.,FXD,CMPSN:5.1K OHM,5%,0.25W	01121	CB5125
R2109	315-0221-00			RES.,FXD,CMPSN:220 OHM,5%,0.25W	01121	CB2215
R2112	315-0102-00			RES.,FXD,CMPSN:1K OHM,5%,0.25W	01121	CB1025
R2113	315-0301-00			RES.,FXD,CMPSN:300 OHM,5%,0.25W	01121	CB3015
R2122	315-0432-00			RES.,FXD,CMPSN:4.3K OHM,5%,0.25W	01121	CB4325
R2123	315-0683-00			RES.,FXD,CMPSN:68K OHM,5%,0.25W	01121	CB6835
R2127	315-0302-00			RES.,FXD,CMPSN:3K OHM,5%,0.25W	01121	CB3025
R2128	311-1225-00	B010100	B219999	RES.,VAR,NONWIR:1K OHM,20%,0.50W	32997	3386F-T04-102
R2128	311-1263-00	B220000		RES.,VAR,NONWIR:1K OHM,10%,0.50W	32997	3329P-L58-102
R2129	315-0183-00			RES.,FXD,CMPSN:18K OHM,5%,0.25W	01121	CB1835
R2135	315-0393-00			RES.,FXD,CMPSN:39K OHM,5%,0.25W	01121	CB3935
R2137	315-0752-00			RES.,FXD,CMPSN:7.5K OHM,5%,0.25W	01121	CB7525
R2139	315-0242-00			RES.,FXD,CMPSN:2.4K OHM,5%,0.25W	01121	CB2425
R2144	315-0104-00			RES.,FXD,CMPSN:100K OHM,5%,0.25W	01121	CB1045
R2146	315-0152-00			RES.,FXD,CMPSN:1.5K OHM,5%,0.25W	01121	CB1525
R2148	315-0103-00			RES.,FXD,CMPSN:10K OHM,5%,0.25W	01121	CB1035
R2150	321-0403-00			RES.,FXD,FILM:154K OHM,1%,0.125W	91637	MFF1816G15402F
R2151	321-0372-00			RES.,FXD,FILM:73.2K OHM,1%,0.125W	91637	MFF1816G73201F
R2153	315-0103-00			RES.,FXD,CMPSN:10K OHM,5%,0.25W	01121	CB1035
R2155	315-0512-00			RES.,FXD,CMPSN:5.1K OHM,5%,0.25W	01121	CB5125
R2158	315-0152-00			RES.,FXD,CMPSN:1.5K OHM,5%,0.25W	01121	CB1525
R2161	315-0102-00			RES.,FXD,CMPSN:1K OHM,5%,0.25W	01121	CB1025
R2162	315-0751-00			RES.,FXD,CMPSN:750 OHM,5%,0.25W	01121	CB7515
R2163	315-0751-00			RES.,FXD,CMPSN:750 OHM,5%,0.25W	01121	CB7515
R2165	315-0102-00			RES.,FXD,CMPSN:1K OHM,5%,0.25W	01121	CB1025
R2166	315-0751-00			RES.,FXD,CMPSN:750 OHM,5%,0.25W	01121	CB7515
R2167	315-0751-00			RES.,FXD,CMPSN:750 OHM,5%,0.25W	01121	CB7515
R2169	315-0102-00			RES.,FXD,CMPSN:1K OHM,5%,0.25W	01121	CB1025
R2170	315-0751-00			RES.,FXD,CMPSN:750 OHM,5%,0.25W	01121	CB7515
R2171	315-0751-00			RES.,FXD,CMPSN:750 OHM,5%,0.25W	01121	CB7515
R2173	315-0102-00			RES.,FXD,CMPSN:1K OHM,5%,0.25W	01121	CB1025
R2174	315-0751-00			RES.,FXD,CMPSN:750 OHM,5%,0.25W	01121	CB7515
R2175	315-0751-00			RES.,FXD,CMPSN:750 OHM,5%,0.25W	01121	CB7515
R2177	315-0511-00			RES.,FXD,CMPSN:510 OHM,5%,0.25W	01121	CB5115
R2178	315-0511-00			RES.,FXD,CMPSN:510 OHM,5%,0.25W	01121	CB5115
R2179	315-0511-00			RES.,FXD,CMPSN:510 OHM,5%,0.25W	01121	CB5115
R2182	321-0262-00			RES.,FXD,FILM:5.23K OHM,1%,0.125W	91637	MFF1816G52300F
R2183	311-1224-00			RES.,VAR,NONWIR:500 OHM,20%,0.50W	32997	3386F-T04-501
R2191	315-0513-00			RES.,FXD,CMPSN:51K OHM,5%,0.25W	01121	CB5135
R2192	315-0133-00			RES.,FXD,CMPSN:13K OHM,5%,0.25W	01121	CB1335
R2193	315-0133-00			RES.,FXD,CMPSN:13K OHM,5%,0.25W	01121	CB1335
R2194	315-0753-00			RES.,FXD,CMPSN:75K OHM,5%,0.25W	01121	CB7535
R2196	321-0308-00			RES.,FXD,FILM:15.8K OHM,1%,0.125W	91637	MFF1816G15801F
R2197	315-0513-00			RES.,FXD,CMPSN:51K OHM,5%,0.25W	01121	CB5135
R2198	321-0319-00			RES.,FXD,FILM:20.5K OHM,1%,0.125W	91637	MFF1816G20501F
R2199	321-0335-00			RES.,FXD,FILM:30.1K OHM,1%,0.125W	91637	MFF1816G30101F
R2201	315-0154-00			RES.,FXD,CMPSN:150K OHM,5%,0.25W	01121	CB1545
R2202	321-0335-00			RES.,FXD,FILM:30.1K OHM,1%,0.125W	91637	MFF1816G30101F
R2203	321-0344-00			RES.,FXD,FILM:37.4K OHM,1%,0.125W	91637	MFF1816G37401F
R2204	321-0335-00			RES.,FXD,FILM:30.1K OHM,1%,0.125W	91637	MFF1816G30101F
R2206	315-0513-00			RES.,FXD,CMPSN:51K OHM,5%,0.25W	01121	CB5135
R2207	315-0154-00			RES.,FXD,CMPSN:150K OHM,5%,0.25W	01121	CB1545
R2208	321-0335-00			RES.,FXD,FILM:30.1K OHM,1%,0.125W	91637	MFF1816G30101F
R2209	321-0335-00			RES.,FXD,FILM:30.1K OHM,1%,0.125W	91637	MFF1816G30101F
R2211	315-0752-00			RES.,FXD,CMPSN:7.5K OHM,5%,0.25W	01121	CB7525
R2213	321-0259-00			RES.,FXD,FILM:4.87K OHM,1%,0.125W	91637	MFF1816G48700F

OPTIONS

Your instrument may be equipped with one or more instrument options. A brief description of each available option is given in the following discussion. Option information is also incorporated into the appropriate sections of the manual. This page and the Table of Contents directs the reader to where the option is documented.

Conversion kits, for most options are available and can be installed at a later time. For further information on instrument options, see your Tektronix Catalog or contact your Tektronix Field Office.

OPTION 1

This option deletes the Readout System. Operation of the instrument is unchanged except there is no alphanumeric display on the crt and the front-panel READOUT control is nonfunctional. The Readout board A12 has been deleted.

OPTION 3

This option adds special shielding and equipment to the instrument for EMI protection when operated in most severe EMI environments. Also, in order to meet the EMI specifications, any unused plug-in compartment must be covered with an EMI shielded blank plug-in panel. One is required for each unused compartment.

Option 3 parts illustrations are located on the pullout pages following the Replaceable Mechanical Parts List. EMI Specifications may be found in the Specification section of the 7613/R7613 Operator's manual.

OPTION 5

This option converts the 7613 and R7613 to 50-400 Hz power Line Frequency operation. Parts illustrations are located on the pullout pages following the Replaceable Mechanical Parts List. Refer to diagram 9 for electrical information.

OPTION 6

This option replaces the standard instrument crt with one incorporating a special internal graticule for Spectrum Analyzer operation. The replacement crt has a 8 x 10 division display area (0.9 cm/div), with LIN, LOG, and FREQUENCY markings.

OPTION 7

This option deletes the five signals out connectors located at the rear panel (REMOTE ERASE IN, EXT SS RESET IN, VERT SIG OUT, +GATE OUT, and +SAWTOOTH OUT). Parts illustrations are located on the pullout pages following the Replaceable Mechanical Parts List.

DIAGRAMS AND CIRCUIT BOARD ILLUSTRATIONS

Symbols and Reference Designators

Electrical components shown on the diagrams are in the following units unless noted otherwise:

Capacitors = Values one or greater are in picofarads (pF).
Values less than one are in microfarads (μF).
Resistors = Ohms (Ω).

Graphic symbols and class designation letters are based on ANSI Standard Y32.2-1975.

Logic symbology is based on ANSI Y32.14-1973 in terms of positive logic. Logic symbols depict the logic function performed and may differ from the manufacturer's data.

The overline on a signal name indicates that the signal performs its intended function when it goes to the low state.

Abbreviations are based on ANSI Y1.1-1972.

Other ANSI standards that are used in the preparation of diagrams by Tektronix, Inc. are:

Y14.15, 1966	Drafting Practices.
Y14.2, 1973	Line Conventions and Lettering.
Y10.5, 1968	Letter Symbols for Quantities Used in Electrical Science and Electrical Engineering.

The following prefix letters are used as reference designators to identify components or assemblies on the diagrams.

A	Assembly, separable or repairable (circuit board, etc)	H	Heat dissipating device (heat sink, heat radiator, etc)	S	Switch or contactor
AT	Attenuator, fixed or variable	HR	Heater	T	Transformer
B	Motor	HY	Hybrid circuit	TC	Thermocouple
BT	Battery	J	Connector, stationary portion	TP	Test point
C	Capacitor, fixed or variable	K	Relay	U	Assembly, inseparable or non-repairable (integrated circuit, etc.)
CB	Circuit breaker	L	Inductor, fixed or variable	V	Electron tube
CR	Diode, signal or rectifier	M	Meter	VR	Voltage regulator (zener diode, etc.)
DL	Delay line	P	Connector, movable portion	W	Wirestrap or cable
DS	Indicating device (lamp)	Q	Transistor or silicon-controlled rectifier	Y	Crystal
E	Spark Gap, Ferrite bead	R	Resistor, fixed or variable	Z	Phase shifter
F	Fuse	RT	Thermistor		
FL	Filter				

The following special symbols may appear on the diagrams:

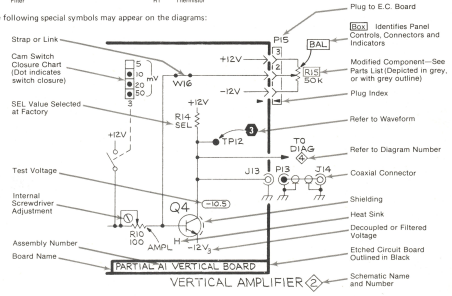

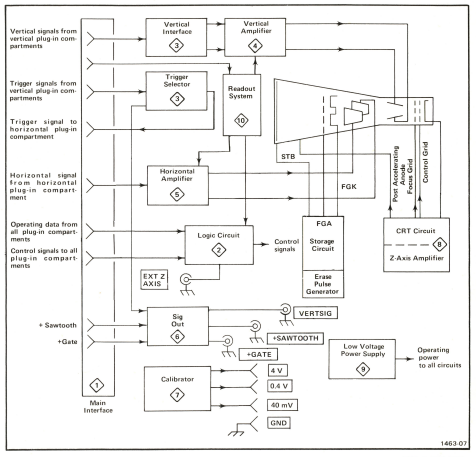

REV. B APR 1977

Fig. 6-1. Block Diagram.

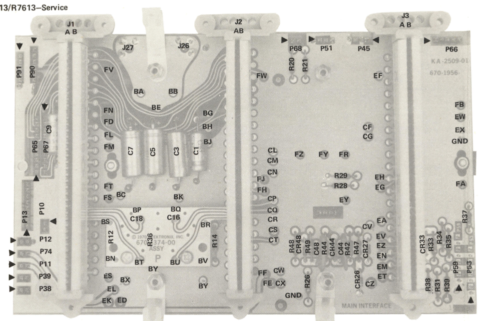

FIG. 6-2A. A1—Main Interface (front) circuit board SN B240000 & up.

Fig. 6-3

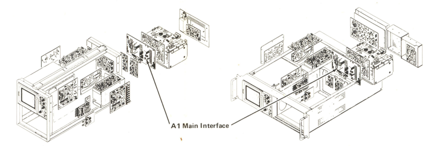

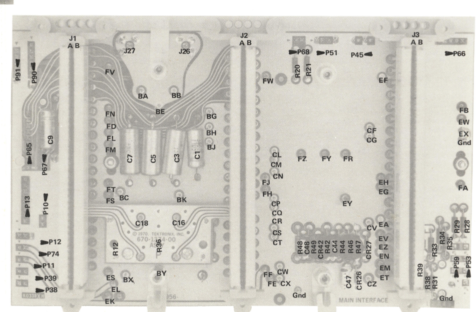

FIG. 6-2B. A1—Main Interface (front) circuit board below SN B240000.

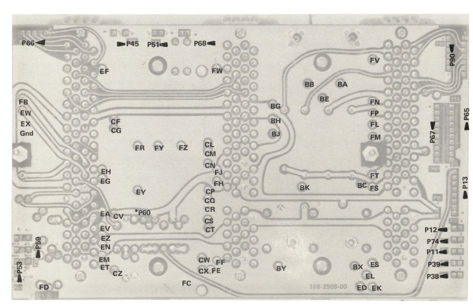

*See Parts List for
serial number ranges.

Fig. 6-3. A1. Main Interface (rear) circuit board.

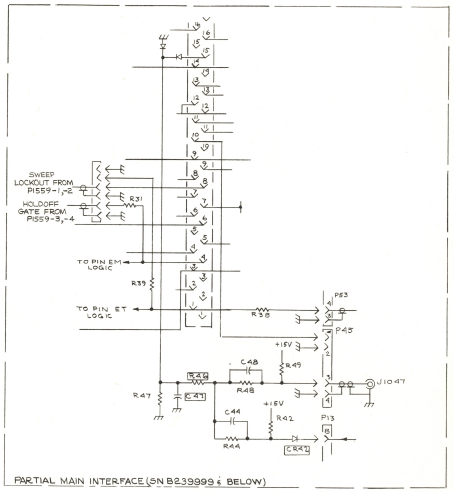

PARTIAL MAIN INTERFACE (SN B239999 & BELOW)

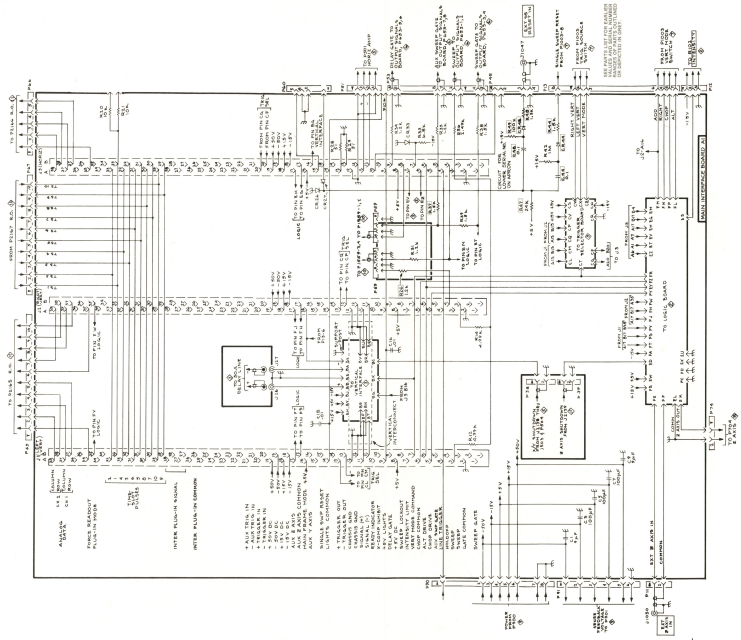

MAIN INTERFACE

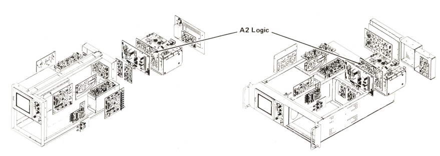

C67 Located on back of board.

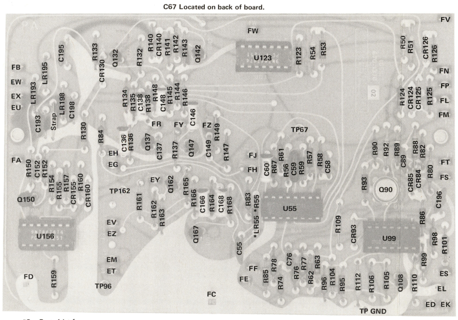

*See Parts List for
serial number ranges.

Fig. 6-4. A2. Logic circuit board.

VOLTAGES AND WAVEFORMS

The voltages and waveforms shown on this diagram were obtained by using the recommended test equipment and test set-ups listed below.

RECOMMENDED TEST EQUIPMENT

ITEM	SPECIFICATIONS		RECOMMENDED TYPE
Oscilloscope	Frequency response Deflection factor Input impedance Sweep rate	DC to 65 MHz 5 mV to 5 V/Div 10 MΩ, 20 pF 500 ns	Tektronix 7603 or 7613 equipped with 7A15A Amplifier and 7B50 Time-Base unit, or equivalent.
Probe	Fast rise 10X attenuation probe compatible with the vertical amplifier of the test oscilloscope.		Tektronix P6105, or equivalent.
Voltmeter (Non-Loading Digital Multimeter)	Input impedance Range	10 MΩ 0 – 500 V	Tektronix 7D13 Digital Multimeter (test oscilloscope must have readout system) or Fairchild Model 7050, or equivalent.

Voltage Measurements

Voltage measurements on this diagram were made under the following conditions:

Set front panel controls (knob type) to mid-range.

Set VERT MODE for CHOP

Set TRIG SOURCE for VERT MODE

Set for NON STORE condition

No plug-in units are installed.

Voltmeter common is connected to chassis ground.

Waveforms

Waveforms shown on this diagram were obtained under the following conditions:

7613 OSCILLOSCOPE UNDER TEST. Front panel controls are set the same as for voltage measurements. A 7A15AN Vertical plug-in unit and a 7B53AN Time Base unit are installed in the mainframe under test. The test oscilloscope 4 Volts calibration signal is applied to the vertical amplifier. The vertical amplifier is set for 1 V/Division deflection centered on the CRT. The 7B53AN is set for free running sweep, 1 ms/Division sweep rate.

TEST OSCILLOSCOPE. The test oscilloscope is externally triggered from the +GATE OUT (MAIN) of the 7613 mainframe under test. The test oscilloscope is AC coupled.

Tolerances of voltages and waveforms shown are 20%.

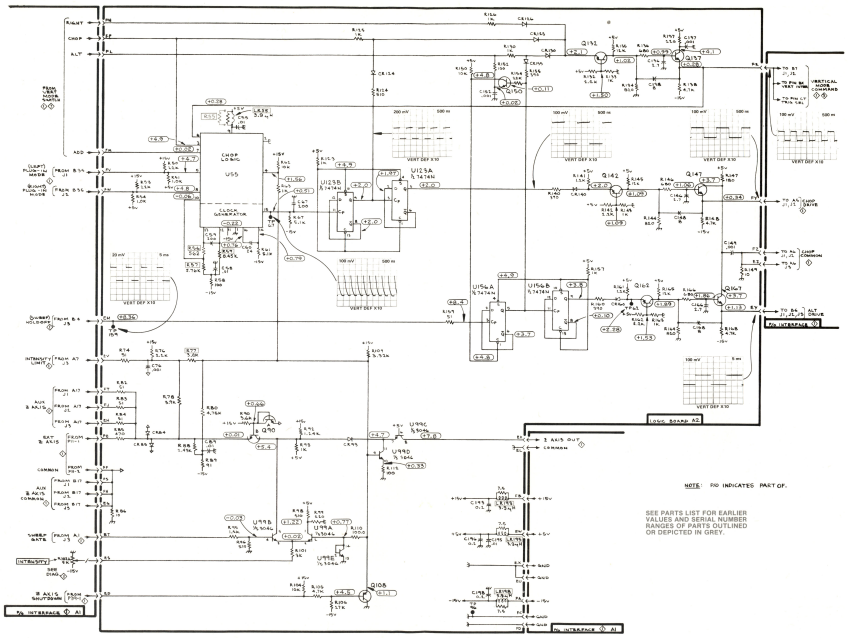

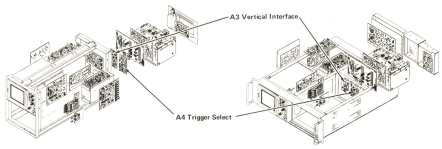

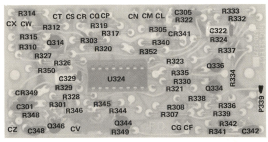

Fig. 6-5. A4. Trigger Selector circuit board.

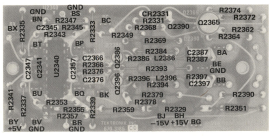

Fig. 6-6A. A3. Vertical Interface circuit board, SN B150000 - above.

Located on back of board:
C2348
C2358

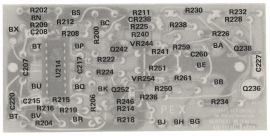

Fig. 6-6B. A3. Vertical Interface circuit board SN B149999 - below.

VOLTAGES AND WAVEFORMS

The voltages and waveforms shown on this diagram were obtained by using the recommended test equipment and test set-ups listed below.

RECOMMENDED TEST EQUIPMENT

ITEM	SPECIFICATIONS		RECOMMENDED TYPE
Oscilloscope	Frequency response Deflection factor Input impedance Sweep rate	DC to 65 MHz 5 mV to 5 V/Div 10 MΩ, 20 pF 500 ns	Tektronix 7603 or 7613 equipped with 7A15A Amplifier and 7B50 Time-Base unit, or equivalent.
Probe	Fast rise 10X attenuation probe compatible with the vertical amplifier of the test oscilloscope.		Tektronix P6105, or equivalent.
Voltmeter (Non-Loading Digital Multimeter)	Input impedance Range	10 MΩ 0 – 500 V	Tektronix 7D13 Digital Multimeter (test oscilloscope must have readout system) or Fairchild Model 7050, or equivalent.

Voltage Measurements

Voltage measurements on this diagram were made under the following conditions:

Set front panel controls (knob type) to mid-range.

Set VERT MODE for CHOP

Set TRIG SOURCE for VERT MODE

Set for NON STORE condition

No plug-in units are installed.

Voltmeter common is connected to chassis ground.

Waveforms

Waveforms shown on this diagram were obtained under the following conditions:

7613 OSCILLOSCOPE UNDER TEST. Front panel controls are set the same as for voltage measurements. A 7A15AN Vertical plug-in unit and a 7B53AN Time Base unit are installed in the mainframe under test. The test oscilloscope 4 Volts calibration signal is applied to the vertical amplifier. The vertical amplifier is set for 1 V/Division deflection centered on the CRT. The 7B53AN is set for free running sweep, 1 ms/Division sweep rate.

TEST OSCILLOSCOPE. The test oscilloscope is externally triggered from the +GATE OUT (MAIN) of the 7613 mainframe under test. The test oscilloscope is AC coupled.

Tolerances of voltages and waveforms shown are 20%.

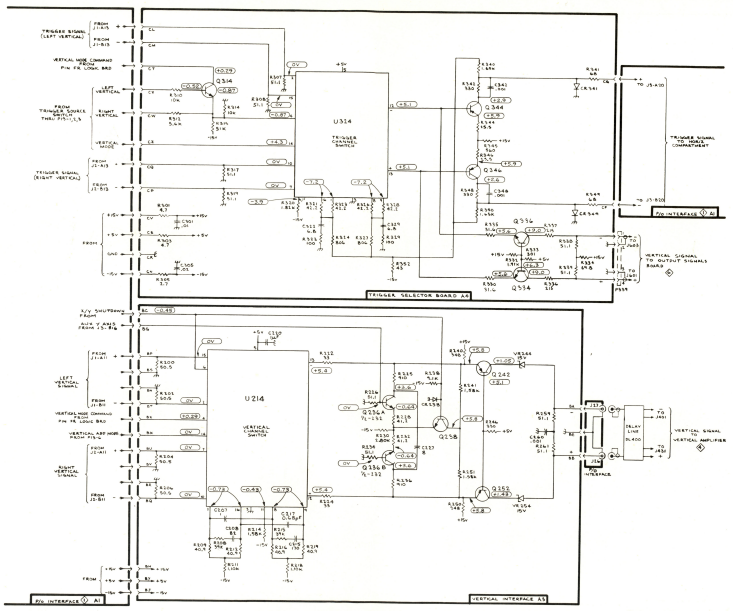

7613

NOTE: P/O INDICATES PART OF.

REV. B, APR 1977

TRIGGER SELECTOR & VERTICAL INTERFACE 3

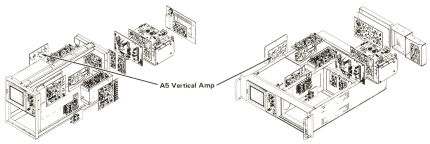

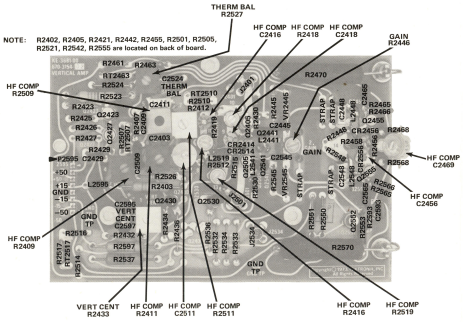

Fig. 6-7A. A5 Vertical Amplifier circuit board, SN B150000 - above.

VOLTAGES AND WAVEFORMS

The voltages and waveforms shown on this diagram were obtained by using the recommended test equipment and test set-ups listed below.

RECOMMENDED TEST EQUIPMENT

ITEM	SPECIFICATIONS		RECOMMENDED TYPE
Oscilloscope	Frequency response	DC to 65 MHz	Tektronix 7603 or 7613 equipped with 7A15A Amplifier and 7B50 Time-Base unit, or equivalent.
	Deflection factor	5 mV to 5 V/Div	
	Input impedance	10 MΩ, 20 pF	
	Sweep rate	500 ns	
Probe	Fast rise 10X attenuation probe compatible with the vertical amplifier of the test oscilloscope.		Tektronix P6105, or equivalent.
Voltmeter (Non-Loading Digital Multimeter)	Input impedance	10 MΩ	Tektronix 7D13 Digital Multimeter (test oscilloscope must have readout system) or Fairchild Model 7050, or equivalent.
	Range	0 – 500 V	

Voltage Measurements

Voltage measurements on this diagram were made under the following conditions:

Set front panel controls (knob type) to mid-range.

Set VERT MODE for CHOP

Set TRIG SOURCE for VERT MODE

Set for NON STORE condition

No plug-in units are installed.

Voltmeter common is connected to chassis ground.

Waveforms

Waveforms shown on this diagram were obtained under the following conditions:

7613 OSCILLOSCOPE UNDER TEST. Front panel controls are set the same as for voltage measurements. A 7A15AN Vertical plug-in unit and a 7B53AN Time Base unit are installed in the mainframe under test. The test oscilloscope 4 Volts calibration signal is applied to the vertical amplifier. The vertical amplifier is set for 1 V/Division deflection centered on the CRT. The 7B53AN is set for free running sweep, 1 ms/Division sweep rate.

TEST OSCILLOSCOPE. The test oscilloscope is externally triggered from the +GATE OUT (MAIN) of the 7613 mainframe under test. The test oscilloscope is AC coupled.

Tolerances of voltages and waveforms shown are 20%.

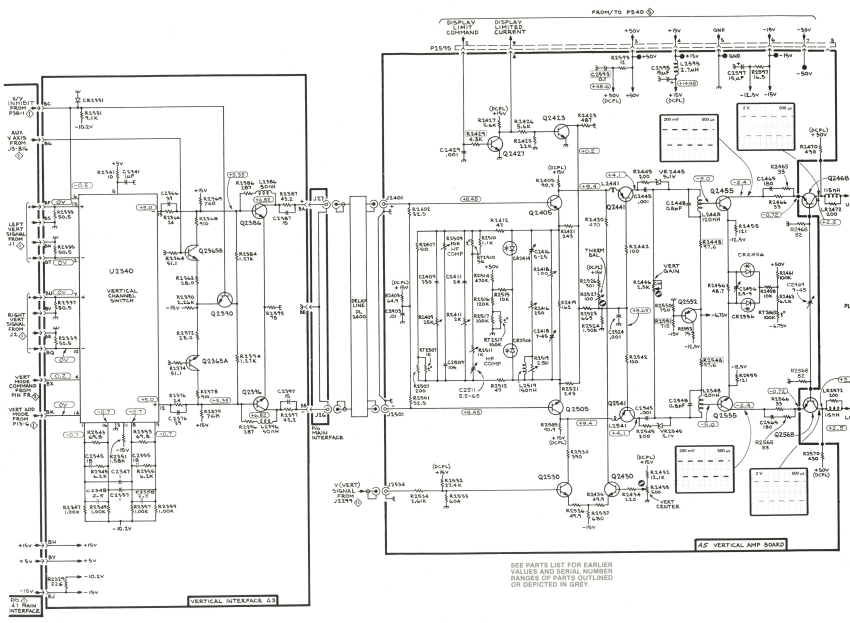

REV D, JUN 1978

SN B150000-ABOVE

VERTICAL INTERFACE ◇ AMPLIFIER

CMD

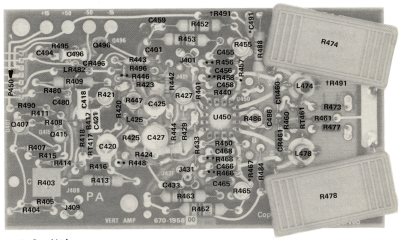

*See Parts List for serial number ranges.

Fig. 6-7B. A5. Vertical Amp circuit board SN B149999 - below.

† Alternate component location for some serial numbers.

**Selectable

VOLTAGES AND WAVEFORMS

The voltages and waveforms shown on this diagram were obtained by using the recommended test equipment and test set-ups listed below.

RECOMMENDED TEST EQUIPMENT

ITEM	SPECIFICATIONS		RECOMMENDED TYPE
Oscilloscope	Frequency response	DC to 65 MHz	Tektronix 7603 or 7613 equipped with 7A15A Amplifier and 7B50 Time-Base unit, or equivalent.
	Deflection factor	5 mV to 5 V/Div	
	Input impedance	10 MΩ, 20 pF	
	Sweep rate	500 ns	
Probe	Fast rise 10X attenuation probe compatible with the vertical amplifier of the test oscilloscope.		Tektronix P6105, or equivalent.
Voltmeter (Non-Loading Digital Multimeter)	Input impedance	10 MΩ	Tektronix 7D13 Digital Multimeter (test oscilloscope must have readout system) or Fairchild Model 7050, or equivalent.
	Range	0 – 500 V	

Voltage Measurements

Voltage measurements on this diagram were made under the following conditions:

Set front panel controls (knob type) to mid-range.

Set VERT MODE for CHOP

Set TRIG SOURCE for VERT MODE

Set for NON STORE condition

No plug-in units are installed.

Voltmeter common is connected to chassis ground.

Waveforms

Waveforms shown on this diagram were obtained under the following conditions:

7613 OSCILLOSCOPE UNDER TEST. Front panel controls are set the same as for voltage measurements. A 7A15AN Vertical plug-in unit and a 7B53AN Time Base unit are installed in the mainframe under test. The test oscilloscope 4 Volts calibration signal is applied to the vertical amplifier. The vertical amplifier is set for 1 V/Division deflection centered on the CRT. The 7B53AN is set for free running sweep, 1 ms/Division sweep rate.

TEST OSCILLOSCOPE. The test oscilloscope is externally triggered from the +GATE OUT (MAIN) of the 7613 mainframe under test. The test oscilloscope is AC coupled.

Tolerances of voltages and waveforms shown are 20%.

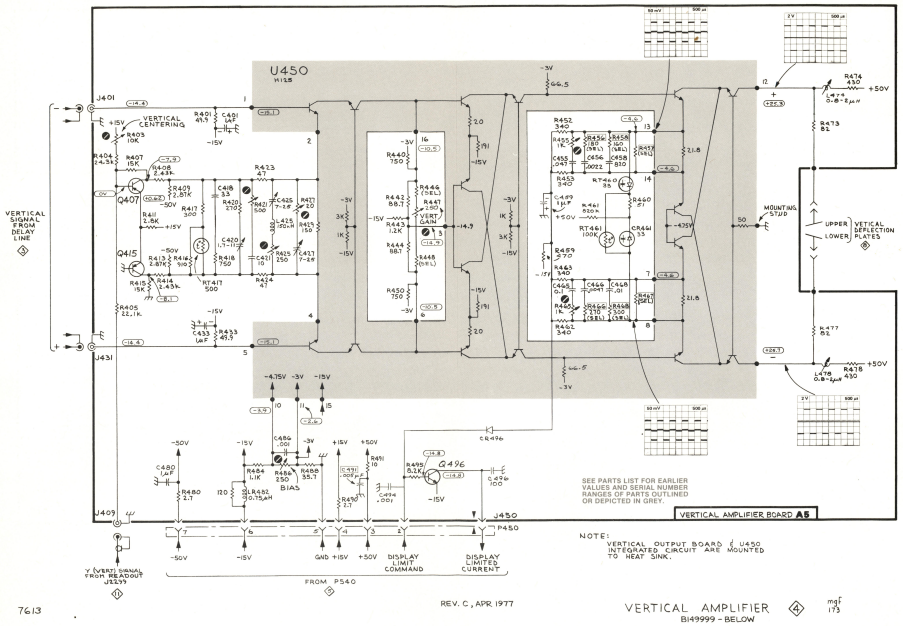

REV. C, APR 1977

VERTICAL AMPLIFIER 4

B149999 - BELOW

FIG. 6-8B

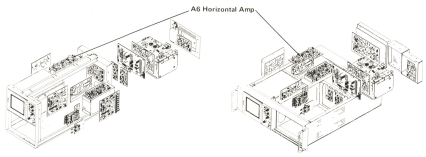

†CR549 & C552 transposed in some instruments.

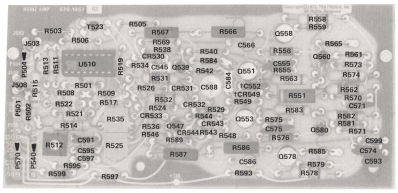

REV. D APR 1977

Fig. 6-8A. A6. Horizontal Amplifier circuit board, SN B070000-up.

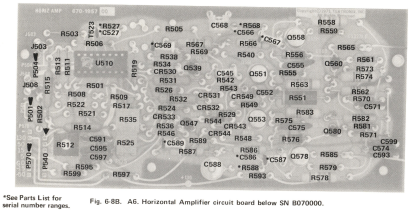

*See Parts List for serial number ranges.

Fig. 6-8B. A6. Horizontal Amplifier circuit board below SN B070000.

VOLTAGES AND WAVEFORMS

The voltages and waveforms shown on this diagram were obtained by using the recommended test equipment and test set-ups listed below.

RECOMMENDED TEST EQUIPMENT

ITEM	SPECIFICATIONS		RECOMMENDED TYPE
Oscilloscope	Frequency response Deflection factor Input impedance Sweep rate	DC to 65 MHz 5 mV to 5 V/Div 10 MΩ, 20 pF 500 ns	Tektronix 7603 or 7613 equipped with 7A15A Amplifier and 7B50 Time-Base unit, or equivalent.
Probe	Fast rise 10X attenuation probe compatible with the vertical amplifier of the test oscilloscope.		Tektronix P6105, or equivalent.
Voltmeter (Non-Loading Digital Multimeter)	Input impedance Range	10 MΩ 0 – 500 V	Tektronix 7D13 Digital Multimeter (test oscilloscope must have readout system) or Fairchild Model 7050, or equivalent.

Voltage Measurements

Voltage measurements on this diagram were made under the following conditions:

Set front panel controls (knob type) to mid-range.

Set VERT MODE for CHOP

Set TRIG SOURCE for VERT MODE

Set for NON STORE condition

No plug-in units are installed.

Voltmeter common is connected to chassis ground.

Waveforms

Waveforms shown on this diagram were obtained under the following conditions:

7613 OSCILLOSCOPE UNDER TEST. Front panel controls are set the same as for voltage measurements. A 7A15AN Vertical plug-in unit and a 7B53AN Time Base unit are installed in the mainframe under test. The test oscilloscope 4 Volts calibration signal is applied to the vertical amplifier. The vertical amplifier is set for 1 V/Division deflection centered on the CRT. The 7B53AN is set for free running sweep, 1 ms/Division sweep rate.

TEST OSCILLOSCOPE. The test oscilloscope is externally triggered from the +GATE OUT (MAIN) of the 7613 mainframe under test. The test oscilloscope is AC coupled.

Tolerances of voltages and waveforms shown are 20%.

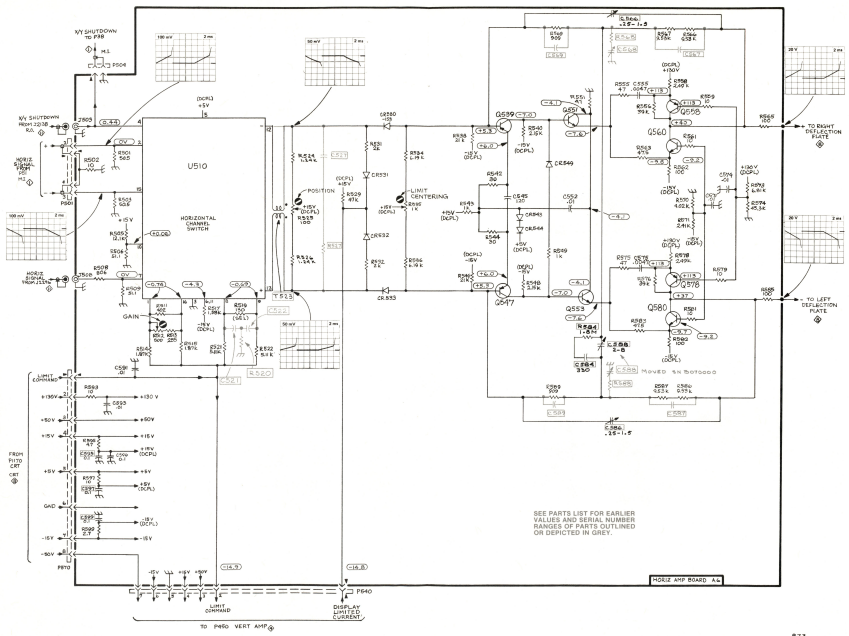

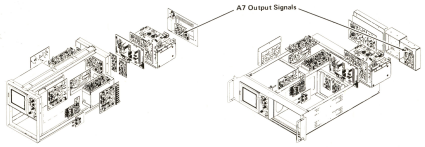

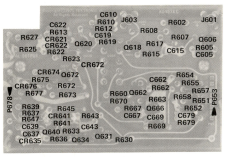

Fig. 6-9. A7, Signal Output circuit board.

VOLTAGES AND WAVEFORMS

The voltages and waveforms shown on this diagram were obtained by using the recommended test equipment and test set-ups listed below.

RECOMMENDED TEST EQUIPMENT

ITEM	SPECIFICATIONS		RECOMMENDED TYPE
Oscilloscope	Frequency response	DC to 65 MHz	Tektronix 7603 or 7613 equipped with 7A15A Amplifier and 7B50 Time-Base unit, or equivalent.
	Deflection factor	5 mV to 5 V/Div	
	Input impedance	10 MΩ, 20 pF	
	Sweep rate	500 ns	
Probe	Fast rise 10X attenuation probe compatible with the vertical amplifier of the test oscilloscope.		Tektronix P6105, or equivalent.
Voltmeter (Non-Loading Digital Multimeter)	Input impedance	10 MΩ	Tektronix 7D13 Digital Multimeter (test oscilloscope must have readout system) or Fairchild Model 7050, or equivalent.
	Range	0 – 500 V	

Voltage Measurements

Voltage measurements on this diagram were made under the following conditions:

Set front panel controls (knob type) to mid-range.

Set VERT MODE for CHOP

Set TRIG SOURCE for VERT MODE

Set for NON STORE condition

No plug-in units are installed.

Voltmeter common is connected to chassis ground.

Waveforms

Waveforms shown on this diagram were obtained under the following conditions:

7613 OSCILLOSCOPE UNDER TEST. Front panel controls are set the same as for voltage measurements. A 7A15AN Vertical plug-in unit and a 7B53AN Time Base unit are installed in the mainframe under test. The test oscilloscope 4 Volts calibration signal is applied to the vertical amplifier. The vertical amplifier is set for 1 V/Division deflection centered on the CRT. The 7B53AN is set for free running sweep, 1 ms/Division sweep rate.

TEST OSCILLOSCOPE. The test oscilloscope is externally triggered from the +GATE OUT (MAIN) of the 7613 mainframe under test. The test oscilloscope is AC coupled.

Tolerances of voltages and waveforms shown are 20%.

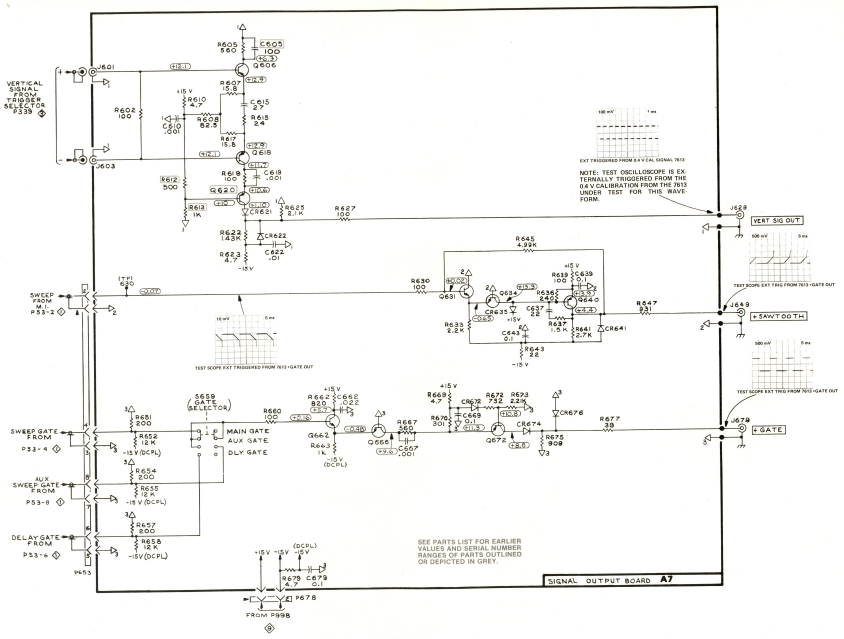

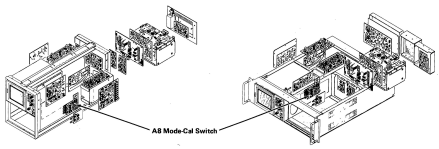

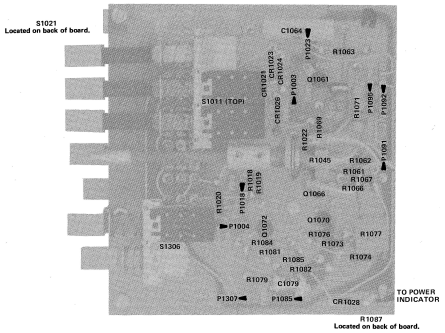

REV. B MAY 1977

Fig. 6-10. A8, Calibrator-Mode Switch Circuit Board.

VOLTAGES AND WAVEFORMS

The voltages and waveforms shown on this diagram were obtained by using the recommended test equipment and test set-ups listed below.

RECOMMENDED TEST EQUIPMENT

ITEM	SPECIFICATIONS	RECOMMENDED TYPE
Oscilloscope	Frequency response DC to 65 MHz Deflection factor 5 mV to 5 V/Div Input impedance 10 MΩ, 20 pF Sweep rate 500 ns	Tektronix 7603 or 7613 equipped with 7A15A Amplifier and 7B50 Time-Base unit, or equivalent.
Probe	Fast rise 10X attenuation probe compatible with the vertical amplifier of the test oscilloscope.	Tektronix P6105, or equivalent.
Voltmeter (Non-Loading Digital Multimeter)	Input impedance 10 MΩ Range 0 – 500 V	Tektronix 7D13 Digital Multimeter (test oscilloscope must have readout system) or Fairchild Model 7050, or equivalent.

Voltage Measurements

Voltage measurements on this diagram were made under the following conditions:

Set front panel controls (knob type) to mid-range.

Set VERT MODE for CHOP

Set TRIG SOURCE for VERT MODE

Set for NON STORE condition

No plug-in units are installed.

Voltmeter common is connected to chassis ground.

Waveforms

Waveforms shown on this diagram were obtained under the following conditions:

7613 OSCILLOSCOPE UNDER TEST. Front panel controls are set the same as for voltage measurements. A 7A15AN Vertical plug-in unit and a 7B53AN Time Base unit are installed in the mainframe under test. The 4 Volt Calibration signal from the mainframe under test isconnected to the input of the vertical amplifier. The vertical amplifier is set for 1 V/Division deflection centered on the CRT. The 7B53AN is set for free running sweep; 1 ms/Division sweep rate.

TEST OSCILLOSCOPE. The test oscilloscope is AC coupled and internally triggered.

Tolerances of voltages and waveforms shown are 20%.

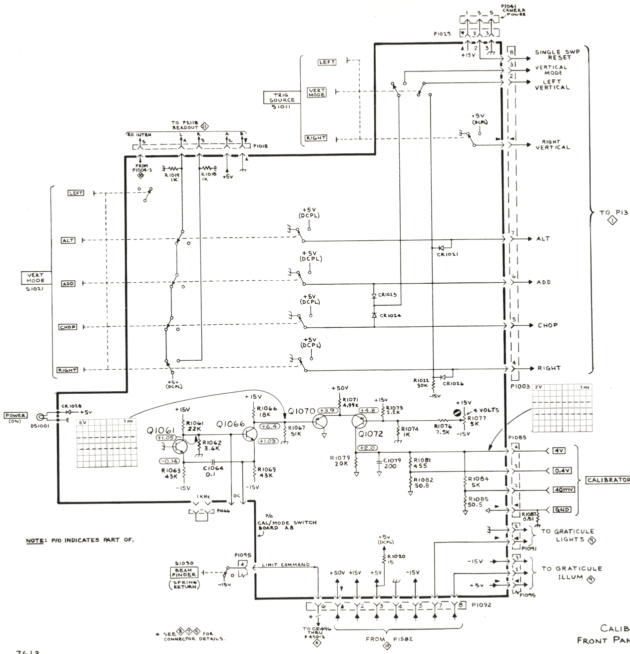

CALIBRATOR & FRONT PANEL SWITCHING ⟨7⟩

7613

REV. B, APR 1977

SN B360000 & UP

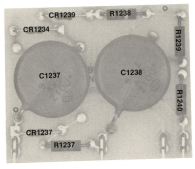

Fig. 6-11A. A20–Focus DC Restorer.

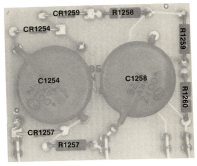

Located on back of board
C1257

Fig. 6-11B. A19–Z-axis DC Restorer.

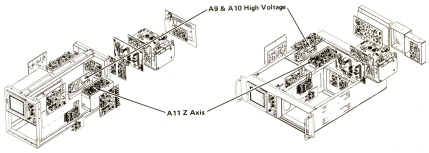

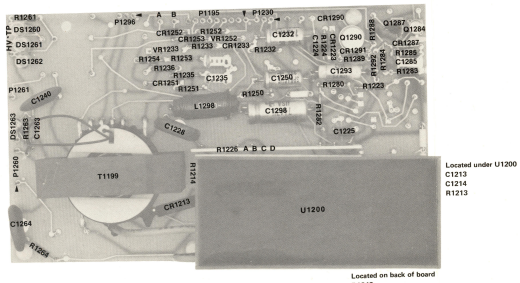

Located under U1200
C1213
C1214
R1213

Located on back of board
R1242
R1248

Fig. 6-11C. A10–High Voltage circuit board SN B360000 & UP

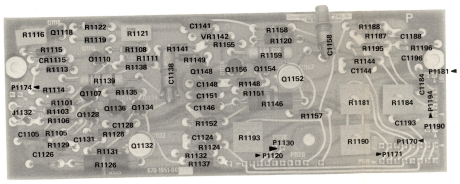

Fig. 6-11D. A11. Z Axis circuit board.

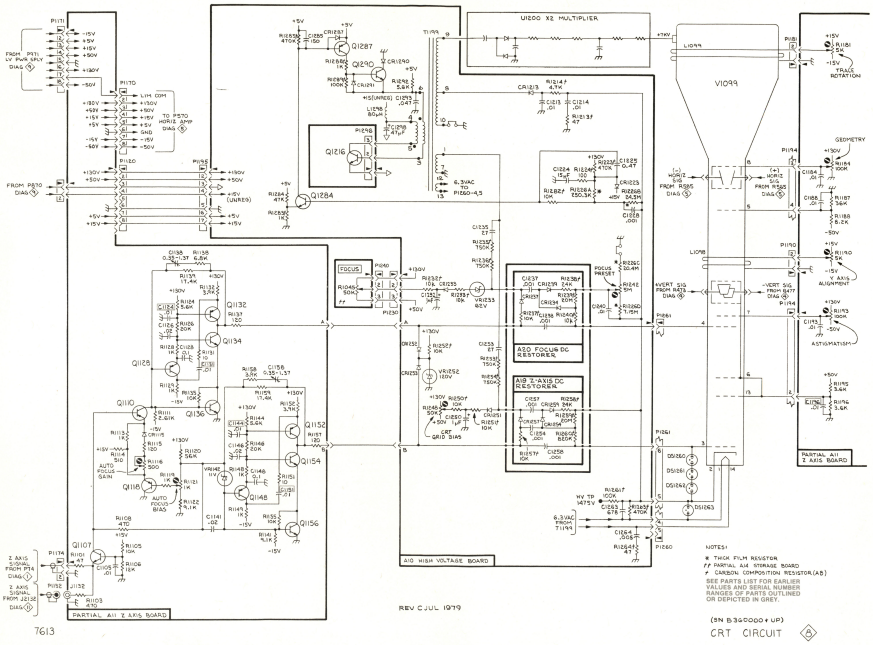
U1200 X2 MULTIPLIER
V1099
A20 FOCUS DC RESTORER
A19 Z-AXIS DC RESTORER
A10 HIGH VOLTAGE BOARD
PARTIAL A11 Z AXIS BOARD
PARTIAL A11 Z AXIS BOARD
FROM P870 DIAG
TO P870 HORIZ AMP DIAG
FROM P871 LV PWR SPLY DIAG
FROM P870 DIAG
FROM P885 DIAG
FROM P885 DIAG
FROM P874 DIAG
Z AXIS SIGNAL FROM J2132 DIAG
Z AXIS SIGNAL FROM J2132 DIAG
TRACE ROTATION
GEOMETRY
Y AXIS ALIGNMENT
ASTIGMATISM
FOCUS PRESET
FOCUS
AUTO FOCUS GAIN
AUTO FOCUS BIAS
6.3VAC FROM T1199
6.3VAC FROM T1199
NOTES:
* THICK FILM RESISTOR
** PARTIAL A11 STORAGE BOARD
* CARBON COMPOSITION RESISTOR (AB)
SEE PARTS LIST FOR EARLIER VALUES AND SERIAL NUMBER RANGES OF PARTS OUTLINED OR DEPICTED IN GREY.
REV C JUL 1979
(SN B340000+ UP)
CRT CIRCUIT
8
7613

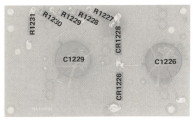

Fig. 6-12A. A9. High Voltage circuit board No. 2.

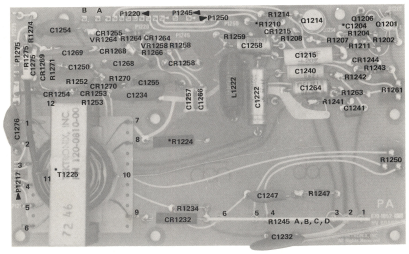

*See Parts List for serial number ranges.

Fig. 6-12B. A10. High Voltage circuit board No. 1.

See A11 Z Axis circuit board back of diagram 7

VOLTAGES AND WAVEFORMS

The voltages and waveforms shown on this diagram were obtained by using the recommended test equipment and test set-ups listed below.

RECOMMENDED TEST EQUIPMENT

ITEM	SPECIFICATIONS		RECOMMENDED TYPE
Oscilloscope	Frequency response Deflection factor Input impedance Sweep rate	DC to 65 MHz 5 mV to 5 V/Div 10 MΩ, 20 pF 500 ns	Tektronix 7603 or 7613 equipped with 7A15A Amplifier and 7B50 Time-Base unit, or equivalent.
Probe	Fast rise 10X attenuation probe compatible with the vertical amplifier of the test oscilloscope.		Tektronix P6105, or equivalent.
Voltmeter (Non-Loading Digital Multimeter)	Input impedance Range	10 MΩ 0 – 500 V	Tektronix 7D13 Digital Multimeter (test oscilloscope must have readout system) or Fairchild Model 7050, or equivalent.

Voltage Measurements

Voltage measurements on this diagram were made under the following conditions:

Set front panel controls (knob type) to mid-range.

Set VERT MODE for CHOP

Set TRIG SOURCE for VERT MODE

Set for NON STORE condition

No plug-in units are installed.

Voltmeter common is connected to chassis ground.

Waveforms

Waveforms shown on this diagram were obtained under the following conditions:

7613 OSCILLOSCOPE UNDER TEST. Front panel controls are set the same as for voltage measurements. A 7A15AN Vertical plug-in unit and a 7B53AN Time Base unit are installed in the mainframe under test. The test oscilloscope 4 Volts calibration signal is applied to the vertical amplifier. The vertical amplifier is set for 1 V/Division deflection centered on the CRT. The 7B53AN is set for free running sweep, 1 ms/Division sweep rate.

TEST OSCILLOSCOPE. The test oscilloscope is externally triggered from the +GATE OUT (MAIN) of the 7613 mainframe under test. The test oscilloscope is AC coupled.

Tolerances of voltages and waveforms shown are 20%.

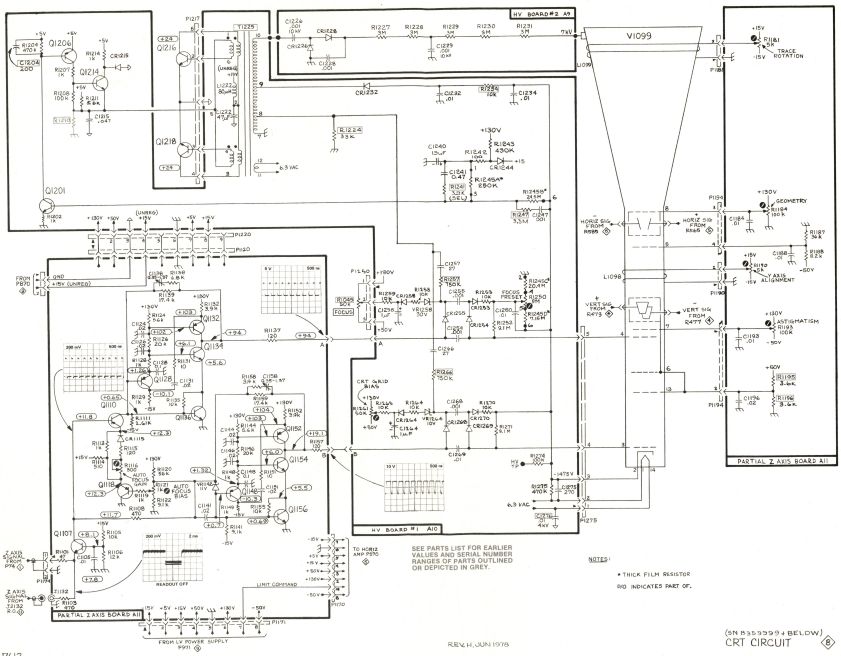

FIG. 6-13B – FIG. 6-14

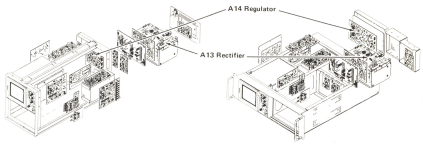

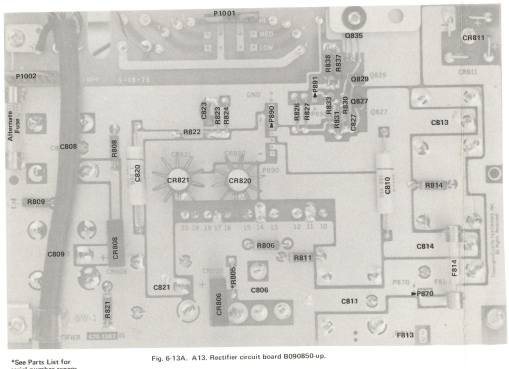

*See Parts List for serial number ranges.

Fig. 6-13A. A13. Rectifier circuit board B090850-up.

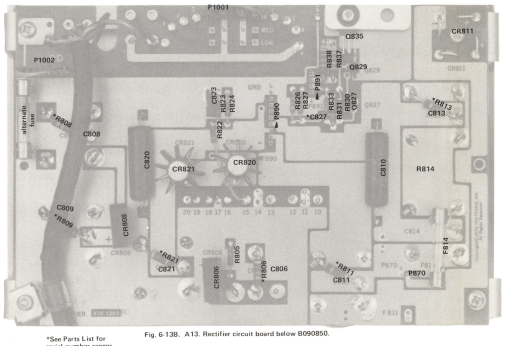

*See Parts List for serial number ranges.

Fig. 6-13B. A13. Rectifier circuit board below B090850.

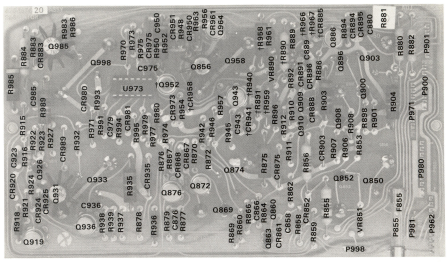

Fig. 6-14B. A14 Low-Voltage Regulator circuit board (SN B365889 & above)

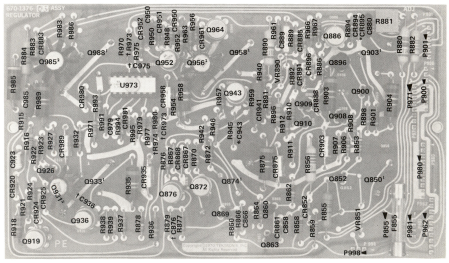

†Mounted on heat sink
‡ Have heat sinks

*See Parts List for serial number ranges.

†Alternate location

Fig. 6-14A. A14 Low-Voltage Regulator circuit board (SN B365888 & below)

Located on back of board for some serial numbers:
*C827 *C975 R973
*C876 *CR973 *R974
*C936 *CR975

VOLTAGES AND WAVEFORMS

The voltages and waveforms shown on this diagram were obtained using the recommended test equipment and test set-ups listed below.

RECOMMENDED TEST EQUIPMENT

ITEM	SPECIFICATIONS		RECOMMENDED TYPE
Oscilloscope	Frequency response Deflection factor Input impedance Sweep rate	DC to 65 MHz 5 mV to 5 V/Div 10 MΩ, 20 pF 500 ns	Tektronix 7603 or 7613 equipped with 7A22 Amplifier and 7B50 Time-Base unit, or equivalent.
Probe	Fast rise 10X attenuation probe compatible with the vertical amplifier of the test oscilloscope.		Tektronix P6105, or equivalent.
Voltmeter (Non-Loading Digital Multimeter)	Input impedance Range	10 MΩ 0 – 500 V	Tektronix 7D13 Digital Multimeter (test oscilloscope must have readout system) or Fairchild Model 7050, or equivalent.
Calibration Fixture	Used for loading power supply for ripple waveforms.		Tektronix Signal Standardizer, Tektronix Part Number 067-0587-01, or equivalent.

Voltage Measurements

Voltage measurements on this diagram were made under the following conditions:

Set knob type front panel controls (except READOUT) to mid-range.

Turn READOUT to off.

Set VERT MODE for CHOP.

Set for NON STORE condition.

Set TRIG SOURCE for VERT MODE.

No plug-ins are installed.

Voltmeter common is connected to chassis ground.

Waveforms

Waveforms shown on this diagram were obtained under the following conditions:

7613 OSCILLOSCOPE UNDER TEST. Front panel controls are set the same as for voltage measurements. A signal standardizer plug-in unit is installed in the vertical plug-in position and a 7B53AN Time Base unit in a horizontal position. The signal standardizer plug-in unit is used for power supply loading and is set for AUX IN with a REP RATE of 100 Hz. No signal is applied. The 7B53AN is set for free running sweep of 1 ms/Division.

TEST OSCILLOSCOPE. The test oscilloscope is AC coupled and set for LINE trigger. A 7A22 Vertical plug-in unit is installed and set as follows:

HF –3 dB POINT	30 kHz
LF –3 dB POINT	DC
+INPUT	AC
–INPUT	GND

Tolerances of voltages and waveforms shown are 20%.

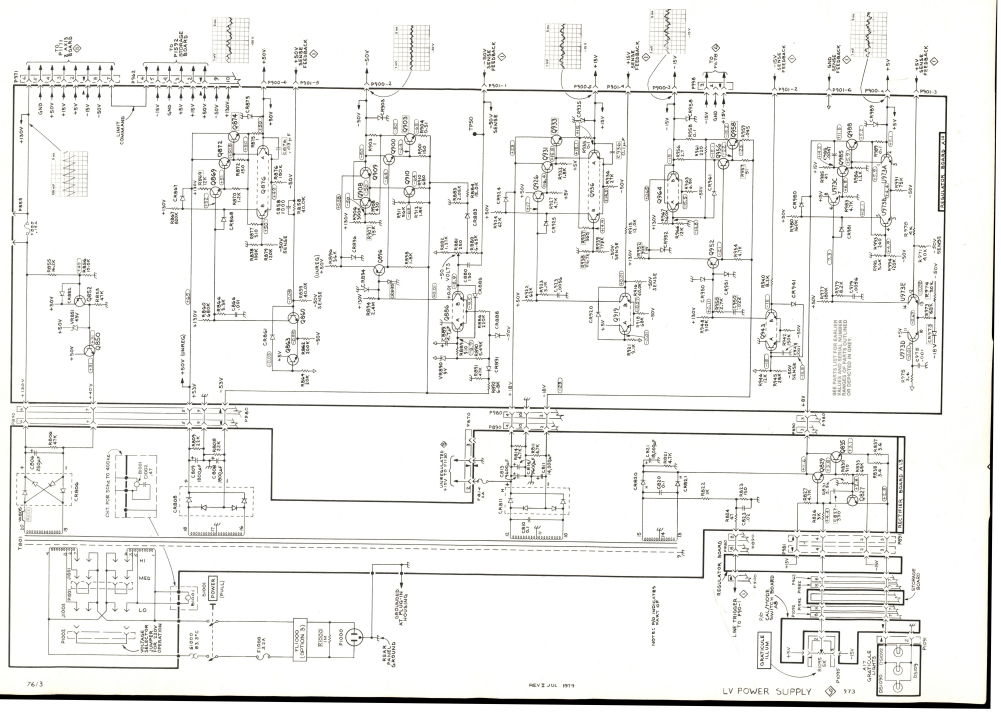

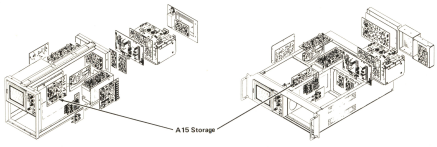

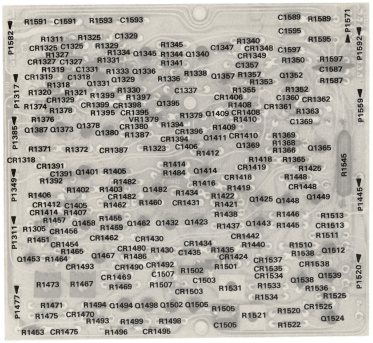

Fig. 6-15A. A15, Storage circuit board, SN B322545 and up.

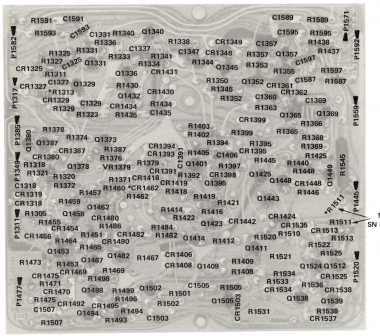

Fig. 6-15B. A15, Storage circuit board, SN B322544 and below.

*See Parts List for serial number ranges.

VOLTAGES AND WAVEFORMS

The voltages and waveforms shown on this diagram were obtained by using the recommended test equipment and test set-ups listed below.

RECOMMENDED TEST EQUIPMENT

ITEM	SPECIFICATIONS		RECOMMENDED TYPE
Oscilloscope	Frequency response	DC to 65 MHz	Tektronix 7603 or 7613 equipped with 7A15A Amplifier and 7B50 Time-Base unit, or equivalent.
	Deflection factor	5 mV to 5 V/Div	
	Input impedance	10 MΩ, 20 pF	
	Sweep rate	500 ns	
Probe	Fast rise 10X attenuation probe compatible with the vertical amplifier of the test oscilloscope.		Tektronix P6105, or equivalent.
Voltmeter (Non-Loading Digital Multimeter)	Input impedance	10 MΩ	Tektronix 7D13 Digital Multimeter (test oscilloscope must have readout system) or Fairchild Model 7050, or equivalent.
	Range	0 – 500 V	

Voltage Measurements

Voltage measurements on this diagram were made under the following conditions:

Set front panel controls (knob type) to mid-range.

Set VERT MODE for CHOP

Set TRIG SOURCE for VERT MODE

Set for STORE condition

No plug-in units are installed.

Voltmeter common is connected to chassis ground.

Waveforms

Waveforms shown on this diagram were obtained under the following conditions:

7613 OSCILLOSCOPE UNDER TEST. Front panel controls are set the same as for voltage measurements. A 7A15AN Vertical plug-in unit and a 7B53AN Time Base unit are installed in the mainframe under test. The 4 Volt Calibration signal from the mainframe under test isconnected to the input of the vertical amplifier. The vertical amplifier is set for 1 V/Division deflection centered on the CRT. The 7B53AN is set for free running sweep; 1 ms/Division sweep rate.

TEST OSCILLOSCOPE. The test oscilloscope is AC coupled and internally triggered.

Tolerances of voltages and waveforms shown are 20%.

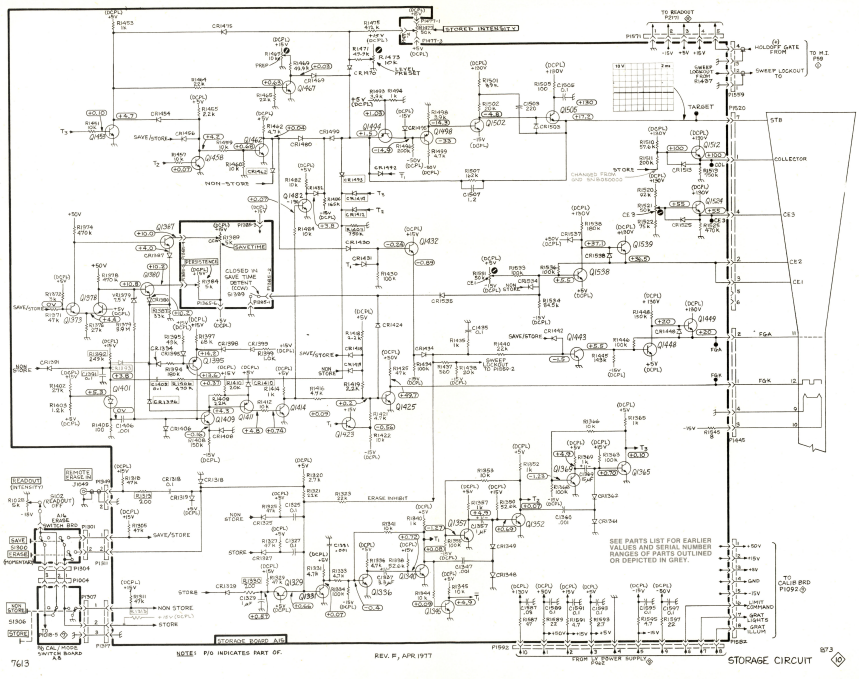

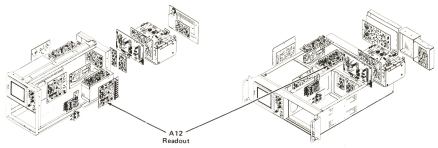

Relocated SN B050000 Location of R2261 - Below SN B050000

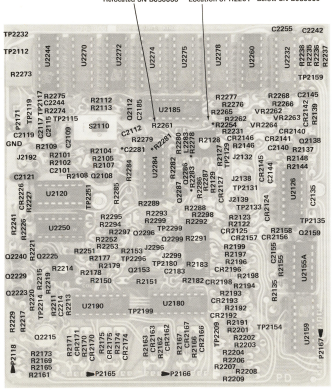

*See Parts List for serial number ranges.

Fig. 6-16. A12. Readout circuit board.

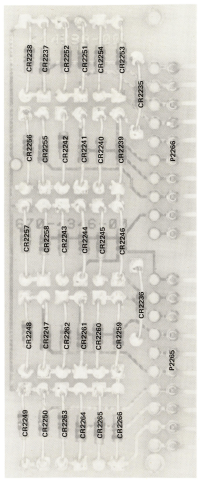

FIG. 6-16A. A18 Protection circuit board(SN B300000 & UP).

VOLTAGES AND WAVEFORMS

The voltages and waveforms shown on this diagram were obtained by using the recommended test equipment and test set-ups listed below.

RECOMMENDED TEST EQUIPMENT

ITEM	SPECIFICATIONS		RECOMMENDED TYPE
Oscilloscope	Frequency response Deflection factor Input impedance Sweep rate	DC to 65 MHz 5 mV to 5 V/Div 10 MΩ, 20 pF 500 ns	Tektronix 7603 or 7613 equipped with 7A15A Amplifier and 7B50 Time-Base unit, or equivalent.
Probe	Fast rise 10X attenuation probe compatible with the vertical amplifier of the test oscilloscope.		Tektronix P6105, or equivalent.
Voltmeter (Non-Loading Digital Multimeter)	Input impedance Range	10 MΩ 0 – 500 V	Tektronix 7D13 Digital Multimeter (test oscilloscope must have readout system) or Fairchild Model 7050, or equivalent.

Voltage Measurements

Voltage measurements on this diagram were made under the following conditions:

Set front panel controls (knob type) to mid-range.

Set VERT MODE for CHOP

Set TRIG SOURCE for VERT MODE

Set for NON STORE condition

No plug-in units are installed.

Voltmeter common is connected to chassis ground.

Waveforms

Waveforms shown on this diagram were obtained under the following conditions:

7613 OSCILLOSCOPE UNDER TEST. Front panel controls are set the same as for voltage measurements. No plug-ins are installed.

VOLTAGE & WAVEFORM CONDITIONS

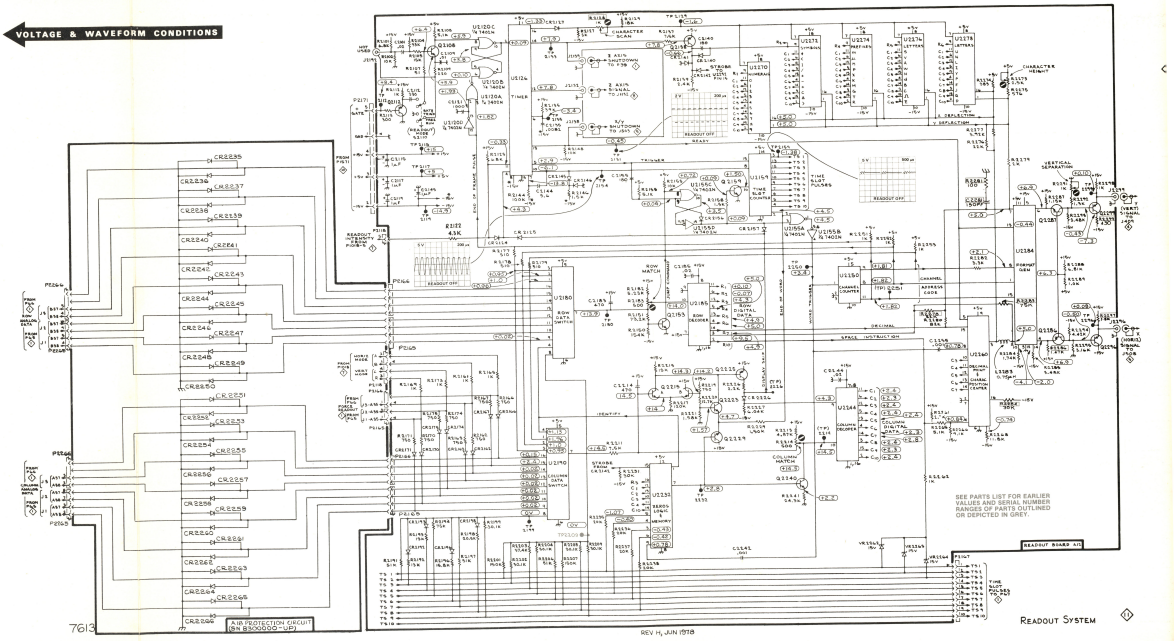

7613

REV H, JUN 1978

Readout System

REPLACEABLE MECHANICAL PARTS

PARTS ORDERING INFORMATION

Replacement parts are available from or through your local Tektronix, Inc. Field Office or representative.

Changes to Tektronix instruments are sometimes made to accommodate improved components as they become available, and to give you the benefit of the latest circuit improvements developed in our engineering department. It is therefore important, when ordering parts, to include the following information in your order: Part number, instrument type or number, serial number, and modification number if applicable.

If a part you have ordered has been replaced with a new or improved part, your local Tektronix, Inc. Field Office or representative will contact you concerning any change in part number.

Change information, if any, is located at the rear of this manual.

SPECIAL NOTES AND SYMBOLS

X000	Part first added at this serial number
00X	Part removed after this serial number

FIGURE AND INDEX NUMBERS

Items in this section are referenced by figure and index numbers to the illustrations.

INDENTATION SYSTEM

This mechanical parts list is indented to indicate item relationships. Following is an example of the indentation system used in the description column.

1 2 3 4 5 Name & Description

Assembly and/or Component
Attaching parts for Assembly and/or Component
- - - * - - -
Detail Part of Assembly and/or Component
Attaching parts for Detail Part
- - - * - - -
Parts of Detail Part
Attaching parts for Parts of Detail Part
- - - * - - -

Attaching Parts always appear in the same indentation as the item it mounts, while the detail parts are indented to the right. Indented items are part of, and included with, the next higher indentation. The separation symbol - - - * - - - indicates the end of attaching parts.

Attaching parts must be purchased separately, unless otherwise specified.

ITEM NAME

In the Parts List, an Item Name is separated from the description by a colon (:). Because of space limitations, an Item Name may sometimes appear as incomplete. For further Item Name identification, the U.S. Federal Cataloging Handbook H6-1 can be utilized where possible.

ABBREVIATIONS

"	INCH
#	NUMBER SIZE
ACTR	ACTUATOR
ADPTR	ADAPTER
ALIGN	ALIGNMENT
AL	ALUMINUM
ASSEM	ASSEMBLED
ASSY	ASSEMBLY
ATTEN	ATTENUATOR
AWG	AMERICAN WIRE GAGE
BD	BOARD
BRKT	BRACKET
BRS	BRASS
BRZ	BRONZE
BSHG	BUSHING
CAB	CABINET
CAP	CAPACITOR
CER	CERAMIC
CHAS	CHASSIS
CKT	CIRCUIT
COMP	COMPOSITION
CONN	CONNECTOR
COV	COVER
CPLG	COUPLING
CRT	CATHODE RAY TUBE
DEG	DEGREE
DWR	DRAWER
ELCTRN	ELECTRON
ELEC	ELECTRICAL
ELCTLT	ELECTROLYTIC
ELEM	ELEMENT
EPL	ELECTRICAL PARTS LIST
EQPT	EQUIPMENT
EXT	EXTERNAL
FIL	FILLISTER HEAD
FLEX	FLEXIBLE
FLH	FLAT HEAD
FLTR	FILTER
FR	FRAME or FRONT
FSTNR	FASTENER
FT	FOOT
FXD	FIXED
GSKT	GASKET
HDL	HANDLE
HEX	HEXAGON
HEX HD	HEXAGONAL HEAD
HEX SOC	HEXAGONAL SOCKET
HLCPS	HELICAL COMPRESSION
HLEXT	HELICAL EXTENSION
HV	HIGH VOLTAGE
IC	INTEGRATED CIRCUIT
ID	INSIDE DIAMETER
IDENT	IDENTIFICATION
IMPLR	IMPELLER
IN	INCH
INCAND	INCANDESCENT
INSUL	INSULATOR
INTL	INTERNAL
LPHLDR	LAMPHOLDER
MACH	MACHINE
MECH	MECHANICAL
MTG	MOUNTING
NIP	NIPPLE
NON WIRE	NOT WIRE WOUND
OBD	ORDER BY DESCRIPTION
OD	OUTSIDE DIAMETER
OVH	OVAL HEAD
PH BRZ	PHOSPHOR BRONZE
PL	PLAIN or PLATE
PLSTC	PLASTIC
PN	PART NUMBER
PNH	PAN HEAD
PWR	POWER
RCPT	RECEPTACLE
RES	RESISTOR
RGD	RIGID
RLF	RELIEF
RTNR	RETAINER
SCH	SOCKET HEAD
SCOPE	OSCILLOSCOPE
SCR	SCREW
SE	SINGLE END
SECT	SECTION
SEMICOND	SEMICONDUCTOR
SHLD	SHIELD
SHLDR	SHOULDERED
SKT	SOCKET
SL	SLIDE
SLFLKG	SELF-LOCKING
SLVG	SLEEVING
SPR	SPRING
SQ	SQUARE
SST	STAINLESS STEEL
STL	STEEL
SW	SWITCH
T	TUBE
TERM	TERMINAL
THD	THREAD
THK	THICK
TNSN	TENSION
TPG	TAPPING
TRH	TRUSS HEAD
V	VOLTAGE
VAR	VARIABLE
W/	WITH
WSHR	WASHER
XFMR	TRANSFORMER
XSTR	TRANSISTOR

CROSS INDEX—MFR. CODE NUMBER TO MANUFACTURER

Mfr. Code	Manufacturer	Address	City, State, Zip
000CY	NORTHWEST FASTENER SALES, INC.	7923 SW CIRRUS DRIVE	BEAVERTON, OREGON 97005
00779	AMP, INC.	P O BOX 3608	HARRISBURG, PA 17105
01009	ALDEN PRODUCTS COMPANY	117 N MAIN STREET	BROCKTON, MA 02403
01295	TEXAS INSTRUMENTS, INC., SEMICONDUCTOR GROUP	P O BOX 5012, 13500 N CENTRAL EXPRESSWAY	DALLAS, TX 75222
01881	ANACONDA AMERICAN BRASS COMPANY, A DIV. OF ANACONDA COMPANY	414 MEADOW STREET	WATERBURY, CT 06720
04963	MINNESOTA MINING AND MFG. CO., ADHESIVES COATINGS AND SEALERS DIVISION	3M CENTER	ST. PAUL, MN 55101
05820	WAKEFIELD ENGINEERING, INC.	AUDUBON ROAD	WAKEFIELD, MA 01880
06540	AMATOM ELECTRONIC HARDWARE, DIV. OF MITE CORP.	446 BLAKE ST.	NEW HAVEN, CT 06515
07707	USM CORP., USM FASTENER DIV.	510 RIVER RD.	SHELTON, CT 06484
08261	SPECTRA-STRIP CORP.	7100 LAMPSON AVE.	GARDEN GROVE, CA 92642
11897	PLASTIGLIDE MFG. CORPORATION	P O BOX 867, 1757 STANFORD ST.	SANTA MONICA, CA 90406
12327	FREEWAY CORPORATION	9301 ALLEN DRIVE	CLEVELAND, OH 44125
12360	ALBANY PRODUCTS CO., DIV. OF PNEUMO DYNAMICS CORPORATION	145 WOODWARD AVENUE	SOUTH NORWALK, CT 06586
13511	AMPHENOL CARDRE DIV., BUNKER RAMO CORP.		LOS GATOS, CA 95030
17516	MOORE, MAYNARD H., JR., INC.	430 MAIN ST.	STONEHAM, MA 02180
22526	BERG ELECTRONICS, INC.	YOUK EXPRESSWAY	NEW CUMBERLAND, PA 17070
23050	PRODUCT COMPONENTS CORP	30 LORRAINE AVE.	MT VERNON, NY 10553
26365	GRIES REPRODUCER CO., DIV. OF COATS AND CLARK, INC.	125 BEECHWOOD AVE.	NEW ROCHELLE, NY 10802
28520	HEYMAN MFG. CO.	147 N. MICHIGAN AVE.	KENILWORTH, NJ 07033
52792	THORGREN TOOL AND MOLDING CO., INC.	1100 EVANS AVENUE	VALPARAISO, IN 46383
55210	GETTIG ENG. AND MFG. COMPANY	PO BOX 85, OFF ROUTE 45	SPRING MILLS, PA 16875
70276	ALLEN MFG. CO.	P. O. DRAWER 570	HARTFORD, CT 06101
70485	ATLANTIC INDIA RUBBER WORKS, INC.	571 W. POLK ST.	CHICAGO, IL 60607
71279	CAMBRIDGE THERMIONIC CORP.	445 CONCORD AVE.	CAMBRIDGE, MA 02138
71590	CENTRALAB ELECTRONICS, DIV. OF GLOBE-UNION, INC.	P O BOX 858	FORT DODGE, IA 50501
71785	TRW, CINCH CONNECTORS	1501 MORSE AVENUE	ELK GROVE VILLAGE, IL 60007
72653	G. C. ELECTRONICS CO., A DIVISION OF HYDROMETALS, INC.	400 S. WYMAN ST.	ROCKFORD, IL 61101
72982	ERIE TECHNOLOGICAL PRODUCTS, INC.	644 W. 12TH ST.	ERIE, PA 16512
73743	FISCHER SPECIAL MFG. CO.	446 MORGAN ST.	CINCINNATI, OH 45206
73803	TEXAS INSTRUMENTS, INC., METALLURGICAL MATERIALS DIV.	34 FOREST STREET	ATTLEBORO, MA 02703
74921	ITEN FIBRE CO.,	4001 BENEFIT AVE., P O BOX 9	ASHTABULA, OH 44004
75915	LITTELFUSE, INC.	800 E. NORTHWEST HWY	DES PLAINES, IL 60016
77342	AMF INC., POTTER AND BRUMFIELD DIV.	200 RICHLAND CREEK DRIVE	PRINCETON, IN 47671
78189	ILLINOIS TOOL WORKS, INC. SHAKEPROOF DIVISION	ST. CHARLES ROAD	ELGIN, IL 60120
79727	C-W INDUSTRIES	550 DAVISVILLE RD.,P O BOX 96	WARMINISTER, PA 18974
79807	WROUGHT WASHER MFG. CO.	2100 S. O BAY ST.	MILWAUKEE, WI 53207
80009	TEKTRONIX, INC.	P O BOX 500	BEAVERTON, OR 97077
82647	TEXAS INSTRUMENTS, INC., CONTROL PRODUCTS DIV.	34 FOREST ST.	ATTLEBORO, MA 02703
83385	CENTRAL SCREW CO.	2530 CRESCENT DR.	BROADVIEW, IL 60153
86445	PENN FIBRE AND SPECIALTY CO., INC.	2032 E. WESTMORELAND ST.	PHILADELPHIA, PA 19134
86928	SEASTROM MFG. COMPANY, INC.	701 SONORA AVENUE	GLENDALE, CA 91201
88245	LITTON SYSTEMS, INC., USECO DIV.	13536 SATICOY ST.	VAN NUYS, CA 91409
93907	CAMCAR SCREW AND MFG. CO.	600 18TH AVE.	ROCKFORD, IL 61101
95987	WECKESSER CO., INC.	4444 WEST IRVING PARK RD.	CHICAGO, IL 60641
97913	INDUSTRIAL ELECTRONIC HARDWARE CORP.	109 PRINCE STREET	NEW YORK, NY 10012
98159	RUBBER TECK, INC.	19115 HAMILTON AVE., P O BOX 389	GARDENA, CA 90247

Fig. & Index No.	Tektronix Part No.	Serial/Model No. Eff	Dscont	Qty	1 2 3 4 5	Name & Description	Mfr Code	Mfr Part Number
1-1	426-0514-00			1		FRAME,MASK:PLASTIC	80009	426-0514-00
-2	378-0625-02			1		FILTER,LT,CRT:AMBER	80009	378-0625-02
-3	331-0258-03			1		MASK,CRT SCALE:	80009	331-0258-03
-4	204-0380-00			1		BODY,TERMINAL:	80009	204-0380-00
-5	131-0765-00			3		TERM,FEEDTHRU:0.584 L X 0.625 OD BRS	80009	131-0765-00
-6	200-0939-01			1		RTNR,CRT SCALE:5.55 X 5.068 X 0.475,AL	80009	200-0939-01
						(ATTACHING PARTS)		
-7	212-0023-00	B010100	B353773	4		SCREW,MACHINE:8-32 X 0.375 INCH,PNH STL	83385	OBD
	212-0008-00	B353774		4		SCREW,MACHINE:8-32 X 0.500 INCH,PNH STL	83385	OBD
-8	131-1022-00	XB023000		2		CONTACT,ELEC:CRT MASK	80009	131-1022-00
						- - - * - - -		
-9	337-1159-00	B010100	B354679	1		WINDOW,OBS:4.78 X 3.93 X 0.07"PLSTC	80009	337-1159-00
	337-1159-03	B354680		1		SHLD,IMPLOSION:4.75 X 3.93 X0.7 THK,PLSTC	80009	337-1159-03
-10	331-0245-00			1		MASK,CRT SCALE:	80009	331-0245-00
-11	333-1691-00			1		PANEL,FRONT:LEFT	80009	333-1691-00
-12	386-1884-03			1		SUPPORT,CRT:FRONT	80009	386-1884-03
-13	386-1517-00			4		. SUPPORT,CRT:FRONT	80009	386-1517-00
						(ATTACHING PARTS)		
-14	212-0040-00	B010100	B070654	2		SCREW,MACHINE:8-32 X 0.375 100 DEG,FLH STL	83385	OBD
	212-0040-00	B070655		1		SCREW,MACHINE:8-32 X 0.375 100 DEG,FLH STL	83385	OBD
	212-0023-00	B070655		1		SCREW,MACHINE:8-32 X 0.375 INCH,PNH STL	83385	OBD
-15	211-0510-00			2		SCREW,MACHINE:6-32 X 0.375 INCH,PNH STL	83385	OBD
						- - - * - - -		
-16	348-0031-00			1		GROMMET,PLASTIC:0.156 INCH DIA	80009	348-0031-00
-17	----- -----			1		CKT BOARD ASSY:GRATICULE LIGHT(SEE A17 EPL)		
-18	378-0614-00			1		. REFLECTOR,LIGHT:MOLDED PLASTIC	80009	378-0614-00
-19	344-0179-00			2		. CLIP,REFL RTNG:PLASTIC	80009	344-0179-00
						(ATTACHING PARTS FOR EACH)		
-20	211-0062-00			1		. SCREW,MACHINE:2-56 X 0.312 INCH,RDH STL	83385	OBD
						- - - * - - -		
-21	366-1402-02			2		PUSH BUTTON:LEFT	80009	366-1402-02
-22	366-1402-03			1		PUSH BUTTON:ALT	80009	366-1402-03
-23	366-1402-04			1		PUSH BUTTON:ADD	80009	366-1402-04
-24	366-1257-31			1		PUSH BUTTON:SIL GRAY,CHOP	80009	366-1257-31
-25	366-1402-06			2		PUSH BUTTON:RIGHT	80009	366-1402-06
-26	366-1402-07			1		PUSH BUTTON:VERT MODE	80009	366-1402-07
-27	366-1402-08			1		PUSH BUTTON:NON STORE	80009	366-1402-08
-28	366-1402-18			1		PUSH BUTTON:STORE	80009	366-1402-18
-29	366-1402-21			1		PUSH BUTTON:SAVE	80009	366-1402-21
-30	366-1257-84			1		PUSH BUTTON:GRAY--ERASE	80009	366-1257-84
-31	366-1480-01	B010100	B189999	1		PUSH BUTTON:ON/OFF	80009	366-1480-01
	366-1480-02	B190000		1		PUSH BUTTON:GRAY	80009	366-1480-02
-32	136-0387-01			1		JACK,TIP:BLACK	71279	450-4252-01-0310
-33	136-0387-00			3		JACK,TIP:GRAY	71279	450-4352-01-0318
-34	366-0494-00			1		KNOB:GRAY WITH SETSCREW	80009	366-0494-00
	213-0153-00			1		. SETSCREW:5-40 X 0.125,STL BK OXD,HEX	000CY	OBD
-35	366-1077-00			1		KNOB:GRAY	80009	366-1077-00
	213-0153-00			1		. SETSCREW:5-40 X 0.125,STL BK OXD,HEX	000CY	OBD
-36	366-1391-00			1		KNOB:GRAY	80009	366-1391-00
	213-0140-00			1		. SETSCREW:2-56 X 0.94 INCH,HEX SOC STL	70276	OBD
-37	366-1215-00			1		KNOB:GRAY	80009	366-1215-00
	213-0153-00			1		. SETSCREW:5-40 X 0.125,STL BK OXD,HEX	000CY	OBD
-38	366-1059-00			1		PUSH BUTTON:GRAY	80009	366-1059-00
-39	366-1077-00			1		KNOB:GRAY	80009	366-1077-00
	213-0153-00			1		. SETSCREW:5-40 X 0.125,STL BK OXD,HEX	000CY	OBD
-40	366-1391-00			1		KNOB:GRAY	80009	366-1391-00
	213-0140-00			1		. SETSCREW:2-56 X 0.94 INCH,HEX SOC STL	70276	OBD
-41	426-0681-00			13		FR,PUSH BUTTON:GRAY PLASTIC	80009	426-0681-00
-42	358-0378-00	B010100	B365351	1		BUSHING,SLEEVE:PRESS MOUNT	80009	358-0378-00
	358-0599-00	B365352		1		BUSHING,SLEEVE:0.125 ID X 0.234 THK,PLSTC	28520	B-187-125
-43	333-1612-00			1		PANEL,FRONT:	80009	333-1612-00
-44	----- -----			1		CKT BOARD ASSY:CAL AND MODE SWITCH(SEE A8 EPL)		
-45	131-0589-00			8		. TERM,PIN:0.46 L X 0.025 SQ.PH BRZ GL	22526	47350
	131-0608-00			37		. TERMINAL,PIN:0.365 L X 0.25 PH,BRZ,GOLD PL	22526	47357
-46	131-0993-00	XB282305		1		. BUS,CONDUCTOR:2 WIRE BLACK	00779	530153-2

Fig. & Index No.	Tektronix Part No.	Serial/Model No. Eff	Dscont	Qty	1 2 3 4 5	Name & Description	Mfr Code	Mfr Part Number
1-47	136-0252-04	B010100	B161209	12		. SOCKET,PIN TERM:0.188 INCH LONG	22526	75060-007
	136-0350-00	B161210		4		. SOCKET,PLUG-IN:3 PIN,LOW PROFILE	80009	136-0350-00
-48	----- -----			1		. SWITCH,PUSH(SEE S1021 EPL)		
-49	----- -----			1		. SWITCH,PUSH:(SEE S1011 EPL)		
-50	----- -----			1		. SWITCH,PUSH:(SEE S1306 EPL)		
-51	361-0411-00			14		. SPACER,PUSH SW:0.13 W X 0.375 INCH L,PLSTC	71590	J64285-00
-52	----- -----			1		. RESISTOR,VAR:(SEE R1048 EPL)		
						(ATTACHING PARTS)		
-53	210-0562-00			2		. NUT,PLAIN,HEX.:0.25-40 X 0.312 INCH,BBS	73743	2X20224-402
-54	210-0046-00			1		. WASHER,LOCK:INTL,0.26 ID X 0.40" OD,STL	78189	1214-05-00-0541C
						- - - * - - -		
-55	386-2285-00			1		. PL,VAR RES MTG:CIRCUIT BOARD	80009	386-2285-00
-56	220-0455-00			2		. NUT,BLOCK:0.281"SQ,THREE 4-40 THRU THDS	80009	220-0455-00
						(ATTACHING PARTS FOR EACH)		
-57	211-0008-00			1		. SCREW,MACHINE:4-40 X 0.25 INCH,PNH STL	83385	OBD
						- - - * - - -		
						(ATTACHING PARTS FOR CKT BD)		
-58	211-0105-00			2		SCREW,MACHINE:4-40 X 0.188"100 DEG,FLH STL	83385	OBD
-59	211-0589-00			1		SCREW,MACHINE:6-32 X 0.312 INCH,PNH BRS	83385	OBD
						- - - * - - -		
-60	385-0016-00			1		SPACER,POST:1.0 L W/6-32 THD THRU,NYLON	80009	385-0016-00
						(ATTACHING PARTS)		
-61	211-0589-00			1		SCREW,MACHINE:6-32 X 0.312 INCH,PNH BRS	83385	OBD
						- - - * - - -		
-62	384-1136-00			3		EXTENSION SHAFT:0.95 INCH LONG	80009	384-1136-00
-63	376-0150-00	B010100	B039999X	1		CPLG,SHAFT,RGD:0.129 ID X 0.312 OD X 0.375	80009	376-0150-00
-64	384-1112-02	B010100	B039999X	1		EXTENSION SHAFT:1.560" LONG,EPOXY GLASS	80009	384-1112-02
-65	----- -----			1		RESISTOR,VAR:(SEE R1477 EPL)		
						(ATTACHING PARTS)		
-66	210-0583-00			1		NUT,PLAIN,HEX.:0.25-32 X 0.312 INCH,BRS	73743	2X20224-402
-67	210-0940-00			1		WASHER,FLAT:0.25 ID X 0.375 INCH OD,STL	79807	OBD
-68	210-0223-01			1		TERMINAL,LUG:0.25 INCH DIA,SE,60 DEG BEND	86928	OBD
						- - - * - - -		
-69	----- -----			2		RESISTOR,VAR:(SEE R102A AND B,R1384 EPL)		
						(ATTACHING PARTS FOR EACH)		
-70	210-0583-00			1		NUT,PLAIN,HEX.:0.25-32 X 0.312 INCH,BRS	73743	2X20224-402
-71	210-0940-00			1		WASHER,FLAT:0.25 ID X 0.375 INCH OD,STL	79807	OBD
-72	210-0046-00			1		WASHER,LOCK:INTL,0.26 ID X 0.40" OD,STL	78189	1214-05-00-0541C
						- - - * - - -		
-73	----- -----			1		RESISTOR,VAR:(SEE R1095,S1030 EPL)		
						(ATTACHING PARTS)		
-74	210-0583-00			1		NUT,PLAIN,HEX.:0.25-32 X 0.312 INCH,BRS	73743	2X20224-402
-75	210-0940-00			1		WASHER,FLAT:0.25 ID X 0.375 INCH OD,STL	79807	OBD
-76	210-0046-00			1		WASHER,LOCK:INTL,0.26 ID X 0.40" OD,STL	78189	1214-05-00-0541C
						- - - * - - -		
-77	----- -----			1		CKT BOARD ASSY:NONSTORE SWITCH(SEE A16 EPL)		
-78	131-0608-00			6		. TERMINAL,PIN:0.365 L X 0.25 PH,BRZ,GOLD PL	22526	47357
-79	260-1442-00			1		. SWITCH,PUSH:2 STA,NON SHORT	80009	260-1442-00
-80	361-0411-00			4		. SPACER,PUSH SW:0.13 W X 0.375 INCH L,PLSTC	71590	J64285-00
-81	220-0637-00			1		. NUT,BLOCK:1.05 X 0.50 X0.188 INCH OA	80009	220-0637-00
						(ATTACHING PARTS)		
-82	211-0101-00			2		. SCREW,MACHINE:4-40 X 0.25" 100 DEG,FLH STL	83385	OBD
						- - - * - - -		
						(ATTACHING PARTS FOR CKT BD)		
-83	211-0001-00			2		SCREW,MACHINE:2-56 X 0.25 INCH,PNH STL	83385	OBD
						- - - * - - -		
-84	386-2119-00			1		SUBPANEL,FRONT:	80009	386-2119-00
						(ATTACHING PARTS)		
-85	213-0123-00			4		SCREW,TPG,TF:6-32 X 0.375,SPCL TYPE,FLH	80009	213-0123-00
-86	211-0589-00			2		SCREW,MACHINE:6-32 X 0.312 INCH,PNH BRS	83385	OBD
						- - - * - - -		

Fig. & Index No.	Tektronix Part No.	Serial/Model No. Eff	Dscont	Qty	1 2 3 4 5	Name & Description	Mfr Code	Mfr Part Number
1-	644-0437-01	B010100	B251859	1		POWER SW ASSY:	80009	644-0437-01
	644-0056-00	B251860		1		POWER SW ASSY:	80009	644-0056-00
-87	200-1318-00	B010100	B251859X	1		. COVER,SW ACTR:	80009	200-1318-00
-88	260-1368-01	B010100	B251859	2		. SWITCH,SENS:SPST,15A,250VAC	77342	A1-M1-361-6-33
-89	260-1709-00	B251860		1		. SWITCH,PUSH:POWER	77342	A9M1-762-6-3
						(ATTACHING PARTS)		
-90	211-0008-00	B251860		2		. SCREW,MACHINE:4-40 X 0.25 INCH,PNH STL	83385	OBD
						- - - * - - -		
-91	211-0020-00	B010100	B060759X	2		. SCREW,MACHINE:4-40 X 1.125 INCH,PNH STL	83385	OBD
	211-0021-00	B060760	B251859X	2		. SCREW,MACHINE:4-40 X 1.25 INCH,PNH STL	83385	OBD
-92	220-0665-00	B010100	B251859X	2		. NUT,PLAIN,HEX.:SLFLKG,4-40 X0.25",PLSTC	23050	OBD
-93	214-1689-00	B010100	B251859X	1		. ACTUATOR,SWITCH:	80009	214-1689-00
-94	214-1226-01	B010100	B251859X	1		. SPRING,HLCPS:0.18 OD X 0.44 INCH LONG	80009	214-1226-01
						(ATTACHING PARTS FOR PWR SWITCH)		
-95	211-0538-00	B010100	B251859	2		SCREW,MACHINE:6-32 X 0.312"100 DEG,FLH STL	83385	OBD
	211-0559-00	B251860		2		SCREW,MACHINE:6-32 X 0.375"100 DEG,FLH STL	83385	OBD
-96	210-0457-00			2		NUT,PLAIN,EXT W:6-32 X 0.312 INCH,STL	83385	OBD
						- - - * - - -		
-97	407-1124-00	B010100	B251859	1		BRACKET,ANGLE:SWITCH,ALUMINUM	80009	407-1124-00
-98	407-1570-00	B251860		1		. BRACKET,ANGLE:POWER SWITCH,ALUMINUM	80009	407-1570-00
-99	210-0202-00			1		. TERMINAL,LUG:0.146 ID,LOCKING,BRZ TINNED	78189	2104-06-00-2520N
						(ATTACHING PARTS)		
-100	211-0538-00	XB241860		1		SCREW,MACHINE:6-32 X 0.312"100 DEG,FLH STL	83385	OBD
-101	210-0457-00	XB241860		1		NUT,PLAIN,EXT W:6-32 X 0.312 INCH,STL	83385	OBD
						- - - * - - -		
-102	337-1760-00	B010100	B251859	1		. SHIELD,ELEC:POWER SWITCH	80009	337-1760-00
-103	200-1731-00	B241860		1		. COVER,ELEC SW:1.9 X 1.0 INCH	80009	200-1731-00
						(ATTACHING PARTS)		
-104	211-0034-00	XB241860		1		. SCREW,MACHINE:2-56 X 0.50 INCH,PNH	83385	OBD
-105	210-0850-00	XB241860		1		. WASHER,FLAT:0.093 ID X 0.281 INCH OD	12327	OBD
-106	210-0405-00	XB241860		1		. NUT,PLAIN,HEX.:2-56 X 0.188 INCH,BRS	73743	2X12157-402
						- - - * - - -		
-107	384-1058-00			1		EXTENSION SHAFT:8.157 INCH LONG	80009	384-1058-00
-108	351-0295-00			3		GUIDE,SLIDE:PLUG-IN,LWR	80009	351-0295-00
						(ATTACHING PARTS FOR EACH)		
-109	211-0101-00	B010100	B272199	1		SCREW,MACHINE:4-40 X 0.25" 100 DEG,FLH STL	83385	OBD
	213-0054-00	B272200		1		SCR,TPG,THD FOR:6-32 X 0.312 INCH,PNH STL	93907	OBD
						- - - * - - -		
-110	343-0004-00			1		CLAMP,LOOP:0.312 INCH DIAMETER,PLSTC	95987	5-16-6B
						(ATTACHING PARTS)		
-111	211-0559-00			1		SCREW,MACHINE:6-32 X 0.375"100 DEG,FLH STL	83385	OBD
-112	210-0457-00			1		NUT,PLAIN,EXT W:6-32 X 0.312 INCH,STL	83385	OBD
-113	210-0863-00			1		WSHR,LOOP CLAMP:FOR 0.50" WIDE CLAMP,STL	95987	C191
						- - - * - - -		
-114	210-0202-00			1		TERMINAL,LUG:0.146 ID,LOCKING,BRZ TINNED	78189	2104-06-00-2520N
						(ATTACHING PARTS)		
-115	211-0504-00			1		SCREW,MACHINE:6-32 X 0.25 INCH,PNH STL	83385	OBD
-116	210-0407-00			1		NUT,PLAIN,HEX.:6-32 X 0.25 INCH,BRS	73743	3038-0228-402
						- - - * - - -		
-117	200-0728-00			2		COV,HANDLE END:	80009	200-0728-00
-118	367-0108-00			1		HANDLE,SCOPE:	80009	367-0108-00
						(ATTACHING PARTS)		
-119	212-0597-00			4		SCREW,MACHINE:10-32 X 0.50 INCH,STL	93907	OBD
-120	386-1624-00			2		PLATE,HDL RTNG:STAINLESS STEEL	80009	386-1624-00
-121	386-1283-02			2		PLATE,HDL MTG:FRONT	80009	386-1283-02
						- - - * - - -		
-122	343-0006-00	XB240000		1		CLAMP,LOOP:0.50 INCH DIAMETER,PLSTC	95987	1-2-6B
						(ATTACHING PARTS)		
-123	211-0559-00	XB240000		1		SCREW,MACHINE:6-32 X 0.375"100 DEG,FLH STL	83385	OBD
-124	210-0457-00	XB240000		1		NUT,PLAIN,EXT W:6-32 X 0.312 INCH,STL	83385	OBD
-125	210-0863-00	XB240000		1		WSHR,LOOP CLAMP:FOR 0.50" WIDE CLAMP,STL	95987	C191
						- - - * - - -		

Fig. & Index No.	Tektronix Part No.	Serial/Model No. Eff	Dscont	Qty	1 2 3 4 5	Name & Description	Mfr Code	Mfr Part Number
1-126	348-0074-00			2		SPT PIVOT,FLIP:RIGHT FRONT AND LEFT REAR	80009	348-0074-00
						(ATTACHING PARTS FOR EACH)		
-127	211-0532-00			2		SCREW,MACHINE:6-32 X 0.75 INCH,FILH STL	83385	OBD
						- - - * - - -		
-128	377-0119-00			4		INSERT,FOOT:0.352 X 0.832X 0.934,PU	80009	377-0119-00
-129	348-0073-00			2		SPT PIVOT,FLIP:LEFT FRONT AND RIGHT REAR	80009	348-0073-00
						(ATTACHING PARTS FOR EACH)		
-130	211-0532-00			2		SCREW,MACHINE:6-32 X 0.75 INCH,FILH STL	83385	OBD
						- - - * - - -		
	386-3286-00	XB282220		1		PLATE,GROUNDING:BAIL	80009	386-3286-00
-131	348-0282-00			1		FLIPSTAND,CAB.:3.438 H,SST	80009	348-0282-00
-132	390-0204-00			1		CAB-BOT,SCOPE:BOTTOM	80009	390-0204-00
						(ATTACHING PARTS)		
-133	211-0503-00			2		SCREW,MACHINE:6-32 X 0.188 INCH,PNH STL	83385	OBD
						- - - * - - -		
-134	352-0084-02	XB030000		1		LAMPHOLDER:	80009	352-0084-02
	390-0345-00	B010100	B029999	2		COVER,SCOPE:LEFT SIDE	80009	390-0345-00
	390-0345-00	B030000		1		COVER,SCOPE:	80009	390-0345-00
-135	390-0345-01	B030000		1		COVER,SCOPE:RIGHT SIDE	80009	390-0345-01
	214-0816-00			2		. LATCH ASSEMBLY:	80009	214-0816-00
-136	214-0603-01			1		. . PIN,SECURING:0.27 INCH LONG	80009	214-0603-01
-137	214-0604-00			1		. . WASH.,SPG TNSN:0.26 ID X 0.47 INCH OD	80009	214-0604-00
-138	386-0227-00			1		. . STOP,CLP,RIM CL:ACETAL	80009	386-0227-00
-139	386-1151-00			1		. . CLAMP,RIM CLENC:SPG STL CD PL	80009	386-1151-00
	426-1042-00			1		FR ASSY,SCOPE:	80009	426-1042-00
-140	426-0857-00			1		. FRAME SECT,CAB.:BOTTOM RIGHT	80009	426-0857-00
						(ATTACHING PARTS)		
-141	210-0782-00			5		. RIVET,SOLID:0.125 OD X 0.312"100 DEG FLH	12360	OBD
						- - - * - - -		
-142	426-0858-00			1		. FRAME SECT,CAB.:LOWER LEFT	80009	426-0858-00
						(ATTACHING PARTS)		
-143	210-0782-00			5		. RIVET,SOLID:0.125 OD X 0.312"100 DEG FLH	12360	OBD
						- - - * - - -		
-144	426-0741-06			1		. FRAME SECT,CAB.:FRONT	80009	426-0741-06
						(ATTACHING PARTS)		
-145	210-0782-00			4		. RIVET,SOLID:0.125 OD X 0.312"100 DEG FLH	12360	OBD
						- - - * - - -		
-146	426-0741-03			1		. FRAME SECT,CAB.:REAR	80009	426-0741-03
						(ATTACHING PARTS)		
-147	210-0782-00			4		. RIVET,SOLID:0.125 OD X 0.312"100 DEG FLH	12360	OBD
						- - - * - - -		
-148	426-0753-00			1		. FRAME SECT,CAB.:TOP CENTER	80009	426-0753-00
-149	380-0238-00			1		. HOUSING,PLUG-IN:ALUMINUM	80009	380-0238-00
-150	131-0930-00			2		CONTACT,ELEC:PLUG-IN GROUND	80009	131-0930-00
						(ATTACHING PARTS FOR EACH)		
-151	211-0008-00			1		SCREW,MACHINE:4-40 X 0.25 INCH,PNH STL	83385	OBD
-152	210-0586-00			1		NUT,PLAIN,EXT W:4-40 X 0.25 INCH,STL	78189	211-041800-00
						- - - * - - -		
-153	131-0799-00			2		CONTACT,ELEC:PLUG-IN GROUND	80009	131-0799-00
						(ATTACHING PARTS FOR EACH)		
-154	211-0008-00			1		SCREW,MACHINE:4-40 X 0.25 INCH,PNH STL	83385	OBD
-155	210-0586-00			1		NUT,PLAIN,EXT W:4-40 X 0.25 INCH,STL	78189	211-041800-00
						- - - * - - -		
-156	131-1018-00			4		CONTACT,ELEC:PLUG-IN GROUND	80009	131-1018-00
						(ATTACHING PARTS FOR EACH)		
-157	211-0008-00			1		SCREW,MACHINE:4-40 X 0.25 INCH,PNH STL	83385	OBD
-158	210-0586-00			1		NUT,PLAIN,EXT W:4-40 X 0.25 INCH,STL	78189	211-041800-00
						- - - * - - -		
-159	----- -----			1		CKT BOARD ASSY:TRIGGER SELECTOR(SEE A4 EPL)		
-160	131-0589-00			4		. TERM,PIN:0.46 L X 0.025 SQ.PH BRZ GL	22526	47350
-161	136-0252-04	B010100	B161209	15		. SOCKET,PIN TERM:0.188 INCH LONG	22526	75060-007
	136-0350-00	B161210	B365764	5		. SOCKET,PLUG-IN:3 PIN,LOW PROFILE	80009	136-0350-00
	136-0252-04	B365765		15		. SOCKET,PIN TERM:0.188 INCH LONG	22526	75060-007

Fig. & Index No.	Tektronix Part No.	Serial/Model No. Eff	Dscont	Qty	1 2 3 4 5	Name & Description	Mfr Code	Mfr Part Number
1-162	136-0260-02			1		. SOCKET,PLUG-IN:16 CONTACT,LOW CLEARANCE	82647	C9316-18
-163	136-0263-03			16		. SOCKET,PIN TERM:FOR 0.025 INCH SQUARE PIN	00779	86250-2
						(ATTACHING PARTS FOR CKT BD)		
-164	211-0008-00			2		SCREW,MACHINE:4-40 X 0.25 INCH,PNH STL	83385	OBD
						- - - * - - -		
-165	----- -----			1		CKT BOARD ASSY:VERTICAL INTERFACE(SEE A3 EPL)		
-166	136-0252-04	B010100	B151109	15		. SOCKET,PIN TERM:0.188 INCH LONG	22526	75060-007
	136-0252-04	B151110	B161209	31		. SOCKET,PIN TERM:0.188 INCH LONG	22526	75060-007
	136-0252-04	B161210	B365764	22		. SOCKET,PIN TERM:0.188 INCH LONG	22526	75060-007
	136-0252-04	B265765		31		. SOCKET,PIN TERM:0.188 INCH LONG	22526	75060-007
-167	136-0350-00	B161210	B365764X	3		. SOCKET,PLUG-IN:3 PIN,LOW PROFILE	80009	136-0350-00
-168	136-0263-03			18		. SOCKET,PIN TERM:FOR 0.025 INCH SQUARE PIN	00779	86250-2
-169	136-0260-01			1		. SOCKET,PLUG-IN:16 CONTACT,RECT SHAPE	71785	133-51-02-075
						(ATTACHING PARTS FOR CKT BD)		
-170	211-0008-00			2		SCREW,MACHINE:4-40 X 0.25 INCH,PNH STL	83385	OBD
						- - - * - - -		
-171	----- -----			1		CKT BOARD ASSY:INTERFACE(SEE A1 EPL)		
-172	----- -----			1		. CKT BD ASSY:VERTICAL INTERCONNECT(SEE A1 EPL)		
-173	131-0787-00			8		. . CONTACT,ELEC:0.64 INCH LONG	22526	47359
						(ATTACHING PARTS FOR CKT BD)		
-174	211-0008-00			2		. SCREW,MACHINE:4-40 X 0.25 INCH,PNH STL	83385	OBD
-175	351-0213-00			2		. GUIDE-POST,LOCK:0.285 INCH LONG	80009	351-0213-00
						- - - * - - -		
-176	386-1558-00			2		. SPACER,CKT BD:0.335 H,ACETAL	80009	386-1558-00
	131-0591-00			32		. CONTACT,ELEC:0.835 INCH LONG	22526	47352
-177	131-0592-00			26		. CONTACT,ELEC:0.885 INCH LONG	22526	47353
-178	136-0252-04	XB251860		2		. SOCKET,PIN TERM:0.188 INCH LONG	22526	75060-007
-179	131-0608-00			85		. TERMINAL,PIN:0.365 L X 0.25 PH,BRZ,GOLD PL	22526	47357
-180	129-0308-00			4		. POST,ELEC-MECH:HEX.,0.25 X 0.465 INCH LONG	80009	129-0308-00
						(ATTACHING PARTS)		
-181	211-0008-00			4		. SCREW,MACHINE:4-40 X 0.25 INCH,PNH STL	83385	OBD
						- - - * - - -		
-182	131-1003-00			2		. CONNECTOR BODY,:CKT BD MT,2 PRONG	80009	131-1003-00
	131-0767-02	B010100	B039999	2		. CONNECTOR,RCPT,:76 CONTACT	80009	131-0767-02
	131-0767-08	B040000		2		. CONNECTOR,RCPT,:PLUG-IN CKT BD,70 CONTACT	80009	131-0767-08
-183	200-0950-00			2		. . COVER,ELEC CONN:PLASTIC	80009	200-0950-00
-184	204-0365-00	B010100	B354199	2		. . BODY,CONNECTOR:PLUG-IN CIRCUIT CARD	80009	204-0365-00
	204-0365-02	B352000	B354200	2		. . BODY,CONNECTOR:PLUG-IN CIRCUIT CARD	80009	204-0365-02
-185	131-0726-00	B010100	B039999	38		. . CONTACT,ELEC:STRAIGHT	80009	131-0726-00
	131-0726-00	B040000		35		. . CONTACT,ELEC:STRAIGHT	80009	131-0726-00
-186	131-0727-00	B010100	B039999	38		. . CONTACT,ELEC:OFFSET	80009	131-0727-00
	131-0727-00	B040000		35		. . CONTACT,ELEC:OFFSET	80009	131-0727-00
-187	131-0899-00			4		. . CONTACT,ELEC:0.048 X 0.006 INCH THK	80009	131-0899-00
						(ATTACHING PARTS FOR EACH CONN)		
-188	213-0232-00			3		. SCR,TPG,THD FOR:2-32 X 0.312 INCH,PNH STL	83385	OBD
						- - - * - - -		
	131-0767-00	B010100	B039999	1		. CONNECTOR,RCPT,:76 CONTACT	80009	131-0767-00
	131-0767-07	B040000		1		. CONNECTOR,RCPT,:PLUG-IN CKT BD,70 CONTACT	80009	131-0767-07
-189	200-0950-00			2		. . COVER,ELEC CONN:PLASTIC	80009	200-0950-00
-190	204-0365-02			1		. . BODY,CONNECTOR:PLUG-IN CIRCUIT CARD	80009	204-0365-02
-191	131-0726-00	B010100	B039999	38		. . CONTACT,ELEC:STRAIGHT	80009	131-0726-00
	131-0726-00	B040000		35		. . CONTACT,ELEC:STRAIGHT	80009	131-0726-00
-192	131-0727-00	B010100	B039999	38		. . CONTACT,ELEC:OFFSET	80009	131-0727-00
	131-0727-00	B040000		35		. . CONTACT,ELEC:OFFSET	80009	131-0727-00
						(ATTACHING PARTS)		
-193	213-0232-00			2		. SCR,TPG,THD FOR:2-32 X 0.312 INCH,PNH STL	83385	OBD
-194	210-0906-00			1		. WASHER,NONMETAL:FIBER,0.125 ID X 0.203"OD	86928	OBD
						- - - * - - -		
-195	131-0804-00			1		. LINK,TERM.CONNE:J-SHAPE	80009	131-0804-00
-196	131-0805-00			2		. LINK,TERM.CONNE:J-SHAPE,0.90X0.82 X 0.312"	80009	131-0805-00
-197	214-1568-00			2		. PIN,GUIDE:	80009	214-1568-00
						(ATTACHING PARTS FOR EACH)		
-198	210-0406-00			1		. NUT,PLAIN,HEX.:4-40 X 0.188 INCH,BRS	73743	2X12161-402
-199	210-0054-00			1		. WASHER,LOCK:SPLIT,0.118 ID X 0.212"OD STL	83385	OBD
						- - - * - - -		

Fig. & Index No.	Tektronix Part No.	Serial/Model No. Eff	Dscont	Qty	1 2 3 4 5	Name & Description	Mfr Code	Mfr Part Number
1-200	344-0147-00			2		. CLIP,SPR,TNSN:CIRCUIT CARD MOUNTING (ATTACHING PARTS FOR CKT BD)	80009	344-0147-00
-201	213-0034-00	B010100	B354199	9		SCR,TPG,THD CTG:4-40 X 0.188 INCH,PNH STL	83385	OBD
	213-0263-00	B354200		9		SCREW,TPG,TF:4-24 X 0.375 INCH,PNH STL	83385	OBD
						- - - * - - -		
-202	----- -----			1		CKT BOARD ASSY:LOGIC(SEE A2 EPL)		
-203	131-0566-00			1		. LINK,TERM.CONNE:0.086 DIA X 2.375 INCH L	55210	L-2007-1
-204	136-0235-00			1		. SOCKET,PLUG-IN:6 CONTACT,ROUND	71785	133-96-12-062
-205	136-0252-04	B010100	B161209	24		. SOCKET,PIN TERM:0.188 INCH LONG	22526	75060-007
	136-0350-00	B161210	B365764	8		. SOCKET,PLUG-IN:3 PIN,LOW PROFILE	80009	136-0350-00
	136-0252-04	B365765		24		. SOCKET,PIN TERM:0.188 INCH LONG	22526	75060-007
-206	136-0260-02			1		. SOCKET,PLUG-IN:16 CONTACT,LOW CLEARANCE	82647	C9316-18
-207	136-0263-03			33		. SOCKET,PIN TERM:FOR 0.025 INCH SQUARE PIN	00779	86250-2
-208	136-0269-02			3		. SOCKET,PLUG-IN:14 CONTACT,LOW CLEARANCE	01295	C95140
-209	214-0579-00			4		. TERM.,TEST PT:BRS CD PL	80009	214-0579-00
-210	348-0278-00			2		. SHLD GSKT,ELEK:FINGER TYPE,7.936 L	80009	348-0278-00

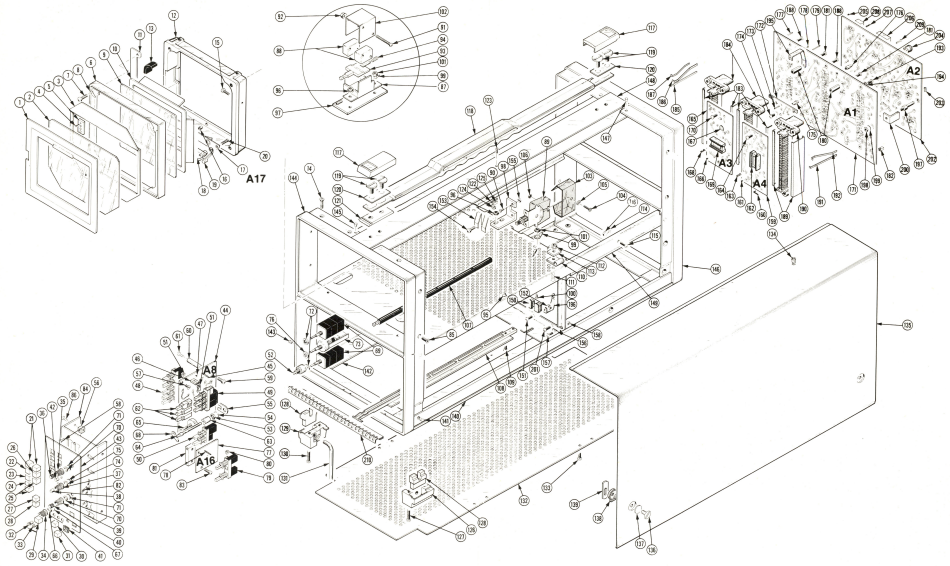
A17
A8
A16
A1
A2
A3
A4

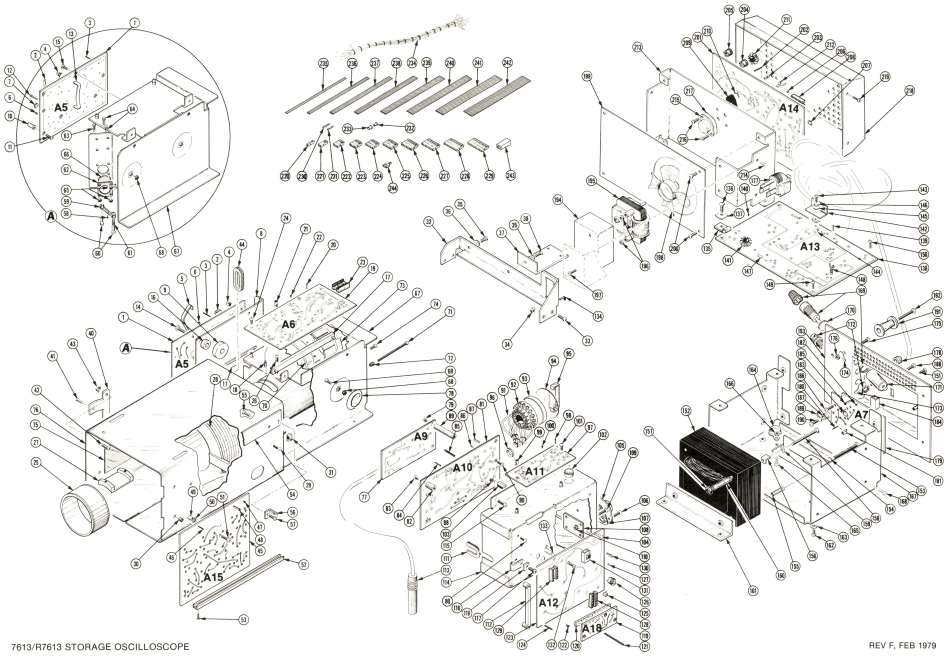
A5
A6
A5
A15
A14
A13
A9
A10
A11
A12
A18
A7

Fig. & Index No.	Tektronix Part No.	Serial/Model No. Eff	Dscont	Qty	1 2 3 4 5	Name & Description	Mfr Code	Mfr Part Number
2-1	----- -----			1		CKT BOARD ASSY:VERTICAL AMPLIFIER(SEE A5 EPL)		
-2	131-0566-00	B010100	B149999	1		. LINK,TERM.CONNE:0.086 DIA X 2.375 INCH L	55210	L-2007-1
	131-0566-00	B150000		4		. LINK,TERM.CONNE:0.086 DIA X 2.375 INCH L	55210	L-2007-1
-3	131-0608-00	B010100	B149999	7		. TERMINAL,PIN:0.365 L X 0.25 PH,BRZ,GOLD PL	22526	47357
	131-0608-00	B150000		8		. TERMINAL,PIN:0.365 L X 0.25 PH,BRZ,GOLD PL	22526	47357
-4	131-1003-00			3		. CONNECTOR BODY,:CKT BD MT,2 PRONG	80009	131-1003-00
-5	131-1303-00	B010100	B149999X	1		. CONTACT,ELEC:IC GROUND	80009	131-1303-00
-6	136-0252-04	B010100	B151109	9		. SOCKET,PIN TERM:0.188 INCH LONG	22526	75060-007
	136-0252-04	B151110	B161209	36		. SOCKET,PIN TERM:0.188 INCH LONG	22526	75060-007
-7	136-0350-00	B161210	B365168	12		. SOCKET,PLUG-IN:3 PIN,LOW PROFILE	80009	136-0350-00
	136-0350-00	B365169		3		. SOCKET,PLUG-IN:3 PIN,LOW PROFILE	80009	136-0350-00
	136-0252-04	B365169		27		. SOCKET,PIN TERM:0.188 INCH LONG	22526	75060-007
-8	214-1652-00	B010100	B149999X	1		. HEAT SINK,ELEC:VERT CKT BOARD,AL	80009	214-1652-00
-9	214-1757-00	B010100	B149999X	1		. HEAT SINK,ELEC:1.0 DIA X 0.27 THICK	80009	214-1757-00
-10	131-0775-00	XB150000		2		. CONTACT,ELEC:HEX,0.25 INCH W/6-32 1 END	88245	1601-A
						(ATTACHING PARTS FOR EACH)		
-11	211-0503-00	XB150000		1		. SCREW,MACHINE:6-32 X 0.188 INCH,PNH STL	83385	OBD
						- - - * - - -		
-12	214-0579-00	XB150000		2		. TERM.,TEST PT:BRS CD PL	80009	214-0579-00
-13	346-0117-00	XB150000		1		. STRAP,GROUND:	80009	346-0117-00
						(ATTACHING PARTS FOR CKT BD)		
-14	211-0014-00	B010100	B149999X	2		SCREW,MACHINE:4-40 X 0.50 INCH,PNH STL	83385	OBD
-15	211-0008-00	B010100	B149999	1		SCREW,MACHINE:4-40 X 0.25 INCH,PNH STL	83385	OBD
	211-0008-00	B150000		1		SCREW,MACHINE:4-40 X 0.25 INCH,PNH STL	83385	OBD
						- - - * - - -		
-16	361-0477-00	B010100	B149999X	2		SPACER,SLEEVE:0.25 L X 0.238 ID	80009	361-0477-00
-17	351-0087-00	B010100	B149999	2		GUIDE,CKT CARD:4.75 INCH LONG,PLASTIC	80009	351-0087-00
	351-0087-00	B150000		1		GUIDE,CKT CARD:4.75 INCH LONG,PLASTIC	80009	351-0087-00
-18	131-0472-01			4		CONTACT,ELEC:FEMALE	80009	131-0472-01
-19	----- -----			1		CKT BOARD ASSY:HORIZONTAL AMPLIFIER(SEE A6 EPL)		
-20	131-0608-00			17		. TERMINAL,PIN:0.365 L X 0.25 PH,BRZ,GOLD PL	22526	47357
-21	131-1003-00			2		. CONNECTOR BODY,:CKT BD MT,2 PRONG	80009	131-1003-00
-22	136-0252-04			25		. SOCKET,PIN TERM:0.188 INCH LONG	22526	75060-007
	136-0252-01			2		. CONTACT,ELEC:0.178 INCH LONG	00779	1-332095-2
	129-0075-00	XB020000	B069999X	1		. INSULATOR,STDF:0.312 OD X 0.128 OD X 0.765	80009	129-0075-00
	361-0007-00	XB020000	B069999X	1		. SPACER,SLEEVE:0.250 INCH DIA,PLASTIC	80009	361-0007-00
-23	136-0260-02			1		. SOCKET,PLUG-IN:16 CONTACT,LOW CLEARANCE	82647	C9316-18
						(ATTACHING PARTS FOR CKT BD)		
-24	211-0008-00			2		SCREW,MACHINE:4-40 X 0.25 INCH,PNH STL	83385	OBD
						- - - * - - -		
-25	----- -----			1		COIL:Y-AXIS(SEE L1098 EPL)		
						(ATTACHING PARTS)		
-26	213-0138-00			2		SCR,TPG,THD FOR:4-40 X 0.188 INCH,PNH STL	83385	OBD
						- - - * - - -		
-27	343-0217-00			1		CLAMP,COIL:Y-AXIS	80009	343-0217-00
-28	119-0368-00			1		DELAY LINE,ELEC:	80009	119-0368-00
						(ATTACHING PARTS)		
-29	213-0034-00			2		SCR,TPG,THD CTG:4-40 X 0.188 INCH,PNH STL	83385	OBD
						- - - * - - -		
-30	348-0031-00			1		GROMMET,PLASTIC:0.156 INCH DIA	80009	348-0031-00
-31	348-0064-00			1		GROMMET,PLASTIC:0.625 INCH DIA	80009	348-0064-00
-32	407-1002-00			1		BRACKET,CHASSIS:ALUMINUM	80009	407-1002-00
						(ATTACHING PARTS)		
-33	211-0538-00			4		SCREW,MACHINE:6-32 X 0.312"100 DEG,FLH STL	83385	OBD
-34	210-0457-00			4		NUT,PLAIN,EXT W:6-32 X 0.312 INCH,STL	83385	OBD
-35	211-0510-00			2		SCREW,MACHINE:6-32 X 0.375 INCH,PNH STL	83385	OBD
-36	210-0993-00			2		WSHR,SHOULDERED:0.143" ID X 0.75" OD,BRS	86928	OBD
						- - - * - - -		
-37	386-2416-00			1		SUPPORT,CHASSIS:	80009	386-2416-00
						(ATTACHING PARTS)		
-38	211-0510-00			2		SCREW,MACHINE:6-32 X 0.375 INCH,PNH STL	83385	OBD
-39	210-0586-00			2		NUT,PLAIN,EXT W:4-40 X 0.25 INCH,STL	78189	211-041800-00
						- - - * - - -		

Fig. & Index No.	Tektronix Part No.	Serial/Model No. Eff	Dscont	Qty	1 2 3 4 5	Name & Description	Mfr Code	Mfr Part Number
2-40	407-1001-00			1		BRKT,CRT SHIELD:FRONT,ALUMINUM	80009	407-1001-00
						(ATTACHING PARTS)		
-41	211-0589-00			2		SCREW,MACHINE:6-32 X 0.312 INCH,PNH BRS	83385	OBD
-42	211-0538-00			2		SCREW,MACHINE:6-32 X 0.312"100 DEG,FLH STL	83385	OBD
-43	210-0457-00			2		NUT,PLAIN,EXT W:6-32 X 0.312 INCH,STL	83385	OBD
						- - - * - - -		
-44	255-0334-00			FT		PLASTIC CHANNEL:12.75 X 0.175X 0.155,NYL	11897	122-37-2500
-45	----- -----			1		CKT BOARD ASSY:STORAGE(SEE A15 EPL)		
-46	131-0608-00			52		. TERMINAL,PIN:0.365 L X 0.25 PH,BRZ,GOLD PL	22526	47357
-47	136-0252-04	B010100	B161209	111		. SOCKET,PIN TERM:0.188 INCH LONG	22526	75060-007
	136-0350-00	B161210		37		. SOCKET,PLUG-IN:3 PIN,LOW PROFILE	80009	136-0350-00
-48	214-0579-00			6		. TERM.,TEST PT:BRS CD PL	80009	214-0579-00
						(ATTACHING PARTS FOR CKT BD)		
-49	361-0527-00			1		SPACER,CKT CARD:0.188 OD X 0.13 INCH LONG	80009	361-0527-00
-50	210-0906-00			1		WASHER,NONMETAL:FIBER,0.125 ID X 0.203"OD	86928	OBD
-51	211-0034-00			1		SCREW,MACHINE:2-56 X 0.50 INCH,PNH	83385	OBD
						- - - * - - -		
-52	351-0079-00			1		GUIDE,CKT BD:6.75 INCH LONG,PLASTIC	80009	351-0079-00
						(ATTACHING PARTS)		
-53	211-0101-00			2		SCREW,MACHINE:4-40 X 0.25" 100 DEG,FLH STL	83385	OBD
						- - - * - - -		
-54	441-1048-00			1		CHASSIS SCOPE:LOGIC	80009	441-1048-00
						(ATTACHING PARTS)		
-55	211-0147-00			2		SCREW,MACHINE:4-40 X 0.25 INCH,PNH STL	83385	OBD
						- - - * - - -		
-56	344-0133-00			2		CLIP,SPR,TNSN:CIRCUIT CARD MOUNTING	80009	344-0133-00
						(ATTACHING PARTS FOR EACH)		
-57	213-0088-00			1		SCR,TPG,THD CTG:4-24 X 0.25 INCH,PNH STL	83385	OBD
-58	210-0627-00	XB150000		2		RIVET,SOLID:0.042 DIA X 0.25 INCH,RDH	80009	210-0627-00
						- - - * - - -		
-59	343-0097-00	XB150000		2		RTNR,TRANSISTOR:HEAT SINK	80009	343-0097-00
						(ATTACHING PARTS FOR EACH)		
-60	210-0599-00	XB150000		2		NUT,SLEEVE:4-40 X 0.391 INCH LONG	80009	210-0599-00
-61	214-0368-00	XB150000		1		SPRING,HLCPS:0.24 DIA X 0.438 INCH LONG	80009	214-0368-00
						- - - * - - -		
-62	352-0062-00	XB150000		2		HOLDER,HEAT SK:1.187 X 1.187 INCHES,PLSTC	80009	352-0062-00
						(ATTACHING PARTS FOR EACH)		
-63	211-0008-00	XB150000		2		SCREW,MACHINE:4-40 X 0.25 INCH,PNH STL	83385	OBD
-64	211-0012-00	XB150000		2		SCREW,MACHINE:4-40 X 0.375 INCH,PNH STL	83385	OBD
-65	210-0406-00	XB150000		4		NUT,PLAIN,HEX.:4-40 X 0.188 INCH,BRS	73743	2X12161-402
						- - - * - - -		
-66	214-1138-00	XB150000		2		HEAT SINK,ELEC:TRANSISTOR,1 INCH OD,AL	80009	214-1138-00
-67	441-1124-00	B010100	B149999	1		CHAS ASSY,SCOPE:	80009	441-1124-00
	441-1192-00	B150000		1		CHASSIS,SCOPE:	80009	441-1192-00
						(ATTACHING PARTS)		
-68	210-0457-00			2		NUT,PLAIN,EXT W:6-32 X 0.312 INCH,STL	83385	OBD
-69	211-0590-00			2		SCREW,MACHINE:6-32 X 0.25 INCH,PNH STL	83385	OBD
						- - - * - - -		
	----- -----			-		. CHASSIS INCLUDES:		
-70	343-0205-01			1		. RTNR,ELCTRN TU:3.0 DIA X 1.5L,DELRIN	80009	343-0205-01
						(ATTACHING PARTS)		
-71	211-0170-00			2		. SCREW,MACHINE:4-40 X 2.75 INCH,PNH STL	83385	OBD
-72	214-1333-00			2		. SPRING,HLCPS:0.213 OD X 0.375 INCH LONG	80009	214-1333-00
						- - - * - - -		
-73	354-0347-00			1		. RING,CRT CLAMP:	80009	354-0347-00
						(ATTACHING PARTS)		
-74	211-0507-00			4		SCREW,MACHINE:6-32 X 0.312 INCH,PNH STL	83385	OBD
						- - - * - - -		
-75	342-0182-00			1		INSULATOR,FILM:	80009	342-0182-00
-76	337-1531-00			1		SHIELD,SECT,CRT:	80009	337-1531-00
	621-0466-01	B010100	B359999	1		POWER SUPPLY:HIGH VOLTAGE	80009	621-0466-01
	621-0466-02	B360000		1		POWER SUPPLY:	80009	621-0466-02
-77	----- -----	B010100	B364982X	1		. CKT BOARD ASSY:HIGH VOLTAGE #2(SEE A9 EPL)		

Fig. & Index No.	Tektronix Part No.	Serial/Model No. Eff	Dscont	Qty	1 2 3 4 5 Name & Description	Mfr Code	Mfr Part Number
2-	346-0032-00	B010100	B029999	2	. . STRAP,RETAINING:0.075 DIA X 4.0 L,MLD RBR	98159	2859-75-4
-78	253-0011-00	B030000	B359999X	FT	. . LACING,ELEC,CAB:10 INCH LONG	17516	OBD
					(ATTACHING PARTS FOR CKT BD)		
-79	211-0040-00	B010100	B359999X	1	. SCREW,MACHINE:4-40 X 0.25",BDGH PLSTC	26365	OBD
					- - - * - - -		
	672-0727-00	XB360000		1	. CKT BOARD ASSY:HIGH VOLTAGE	80009	672-0727-00
					(ATTACHING PARTS)		
-80	211-0008-00			4	. SCREW,MACHINE:4-40 X 0.25 INCH,PNH STL	83385	OBD
					- - - * - - -		
	----- -----			-	. . CKT BOARD ASSY INCLUDES:		
-81	----- -----			1	. . CKT BOARD ASSY:HIGH VOLTAGE #1(SEE A10 EPL)		
-82	129-0143-00	B010100	B359999	3	. . . INSULATOR,STDF:0.312 OD X 0.406" L,NYLON	80009	129-0143-00
	129-0143-00	B360000		4	. . . INSULATOR,STDF:0.312 OD X 0.406" L,NYLON	80009	129-0143-00
					(ATTACHING PARTS FOR EACH)		
-83	211-0008-00	B010100	B359999	1	. . . SCREW,MACHINE:4-40 X 0.25 INCH,PNH STL	83385	OBD
	211-0040-00	B360000		1	. . . SCREW,MACHINE:4-40 X 0.25",BDGH PLSTC	26365	OBD
					- - - * - - -		
-84	131-0589-00	B010100	B359999	5	. . . TERM,PIN:0.46 L X 0.025 SQ.PH BRZ GL	22526	47350
	131-0589-00	B360000		6	. . . TERM,PIN:0.46 L X 0.025 SQ.PH BRZ GL	22526	47350
-85	131-0608-00	B010100	B359999	21	. . . TERMINAL,PIN:0.365 L X 0.25 PH,BRZ,GOLD PL	22526	47357
	131-0608-00	B360000		15	. . . TERMINAL,PIN:0.365 L X 0.25 PH,BRZ,GOLD PL	22526	47357
-86	136-0252-04			9	. . . SOCKET,PIN TERM:0.188 INCH LONG	22526	75060-007
-87	214-0579-00			1	. . . TERM.,TEST PT:BRS CD PL	80009	214-0579-00
-88	166-0292-00	B010100	B359999X	2	. . . SPACER,SLEEVE:PLSTC,0.155 DIA X 0.065"L	80009	166-0292-00
-89	129-0251-00	B010100	B359999	4	. . . INSULATOR,STDF:0.250 OD X 1.125" L,PLSTC	80009	129-0251-00
	129-0251-00	B360000		3	. . . INSULATOR,STDF:0.250 OD X 1.125" L,PLSTC	80009	129-0251-00
					(ATTACHING PARTS FOR EACH)		
-90	211-0008-00	B010100	B359999	1	. . . SCREW,MACHINE:4-40 X 0.25 INCH,PNH STL	83385	OBD
	211-0040-00	B360000		1	. . . SCREW,MACHINE:4-40 X 0.25",BDGH PLSTC	26365	OBD
					- - - * - - -		
	131-0566-00	XB360000		2	. . . LINK,TERM.CONNE:0.086 DIA X 2.375 INCH L	55210	L-2007-1
	124-0162-00	XB360000		1	. . . TERMINAL BOARD:4 NOTCH,CERAMIC,STUD MTD	80009	124-0162-00
	361-0007-00	XB360000		1	. . . SPACER,SLEEVE:0.250 INCH DIA,PLASTIC	80009	361-0007-00
	----- -----	XB360000		1	. . CKT BOARD ASSY:FOCUS DC RESTR(SEE A19 EPL)		
	131-1261-00	XB360000		4	. . . CONTACT,ELEC:F-SHAPED	00779	1-380953-0
	----- -----	XB360000		1	. . CKT BOARD ASSY:Z AXIS DC RESTR(SEE A20 EPL)		
	131-1261-00	XB360000		4	. . . CONTACT,ELEC:F-SHAPED	00779	1-380953-0
-91	136-0506-00	B010100	B359999	1	. SKT,PL-IN ELEK:ELCTRN TUBE,14 CONT W/LEADS	80009	136-0506-00
	136-0589-03	B360000		1	. SKT,PL-IN ELEK:ELCTRN TUBE,14 CONT W/LEADS	80009	136-0589-03
-92	136-0304-02			1	. . SOCKET,PLUG-IN:CRT,14 PIN SOCKET,W/PINS	80009	136-0304-02
-93	200-0917-01			1	. . COV,ELECTRON TU:2.052 OD X 0.291" THK,PLSTC	80009	200-0917-01
-94	367-0117-00			1	. . PULL,SOCKET:	80009	367-0117-00
-95	343-0235-00	B010100	B359999	1	. . CLAMP,CRT SKT:DELRIN	80009	343-0235-00
	343-0254-00	B360000		1	. . CLP,ELCTRN TUBE:	80009	343-0254-00
-96	348-0012-00	XB360000		1	. . GROMMET,RUBBER:0.625 INCH DIA	72653	1043-1M
	352-0201-00			1	. . CONN BODY,PL,EL:5 WIRE BLACK	80009	352-0201-00
	352-0202-01	XB360000		1	. . CONN BODY,PL,EL:6 WIRE BROWN	80009	352-0202-01
	175-0827-00			FT	. . WIRE,ELECTRICAL:4 WIRE RIBBON	08261	SS-0426-710610C
-97	----- -----			1	. CKT BOARD ASSY:Z AXIS(SEE A11 EPL)		
-98	131-0608-00			36	. . TERMINAL,PIN:0.365 L X 0.25 PH,BRZ,GOLD PL	22526	47357
-99	131-1003-00			1	. . CONNECTOR BODY,:CKT BD MT,2 PRONG	80009	131-1003-00
-100	136-0252-01			1	. . CONTACT,ELEC:0.178 INCH LONG	00779	1-332095-2
	136-0252-04			35	. . SOCKET,PIN TERM:0.188 INCH LONG	22526	75060-007
					(ATTACHING PARTS FOR CKT BD)		
-101	211-0008-00			3	. SCREW,MACHINE:4-40 X 0.25 INCH,PNH STL	83385	OBD
					- - - * - - -		
-102	348-0063-00			1	. GROMMET,PLASTIC:0.50 INCH DIA	80009	348-0063-00
-103	129-0236-00	B010100	B359999X	1	. SPACER,POST:0.188 HEX X 0.375 INCH LONG	06540	9726-A-0440
					(ATTACHING PARTS)		
-104	211-0008-00	B010100	B359999X	1	. SCREW,MACHINE:4-40 X 0.25 INCH,PNH STL	83385	OBD
					- - - * - - -		

Fig. & Index No.	Tektronix Part No.	Serial/Model No. Eff	Dscont	Qty	1 2 3 4 5	Name & Description	Mfr Code	Mfr Part Number
2-105	----- -----	B010100	B359999	2		. TRANSISTOR:(SEE Q1216 EPL)		
	----- -----	B360000		1		. TRANSISTOR:(SEE Q1216 EPL)		
						(ATTACHING PARTS)		
-106	213-0146-00	B010100	B359999	4		. SCR,TPG,THD FOR:6-20 X 0.313 INCH,PNH STL	83385	OBD
	213-0146-00	B360000		2		. SCR,TPG,THD FOR:6-20 X 0.313 INCH,PNH STL	83385	OBD
-107	386-0978-00	B010100	B359999	2		. INSULATOR,PLATE:TRANSISTOR,MICA	80009	386-0978-00
	386-0978-00	B360000		1		. INSULATOR,PLATE:TRANSISTOR,MICA	80009	386-0978-00
						- - - * - - -		
-108	136-0280-00	B010100	B359999	2		. SOCKET,PLUG-IN:FOR TO-3 FOR TO-3	97913	LST 2202-2
	136-0280-00	B360000		1		. SOCKET,PLUG-IN:FOR TO-3 FOR TO-3	97913	LST 2202-2
						(ATTACHING PARTS)		
-109	211-0101-00	B010100	B359999	4		. SCREW,MACHINE:4-40 X 0.25" 100 DEG,FLH STL	83385	OBD
	211-0101-00	B360000		2		. SCREW,MACHINE:4-40 X 0.25" 100 DEG,FLH STL	83385	OBD
-110	210-0586-00	B010100	B359999	4		. NUT,PLAIN,EXT W:4-40 X 0.25 INCH,STL	78189	211-041800-00
	210-0586-00	B360000		2		. NUT,PLAIN,EXT W:4-40 X 0.25 INCH,STL	78189	211-041800-00
						- - - * - - -		
	343-0144-00	XB360000		1		. CLAMP,LOOP:0.125 INCH ID,BLK NYLON	95987	1-8-2
						(ATTACHING PARTS)		
	211-0101-00	XB360000		1		. SCREW,MACHINE:4-40 X 0.25" 100 DEG,FLH STL	83385	OBD
	210-0586-00	XB360000		1		. NUT,PLAIN,EXT W:4-40 X 0.25 INCH,STL	78189	211-041800-00
						- - - * - - -		
	214-2736-00	XB360000		1		. PLUG,HOLE:0.312 DIA,PLASTIC	28520	DP-312
	175-2132-00	XB360000		1		. CA ASSY,SP,ELEC:3,24 AWG,5.0 L	80009	175-2132-00
	129-0722-00	XB360000		1		. SPACER,POST:0.656 LONG,PLASTIC	80009	129-0722-00
	255-0334-00	B010100	B029999	FT		. PLASTIC CHANNEL:12.75 X 0.175X 0.155,NYL	11897	122-37-2500
	255-0334-00	B030000	B051189	FT		. PLASTIC CHANNEL:12.75 X 0.175X 0.155,NYL	11897	122-37-2500
	348-0012-00	B030000	B359999X	1		. GROMMET,RUBBER:0.625 INCH DIA	72653	1043-1M
-111	348-0085-00	B051190	B292407	1		. GROMMET,PLASTIC:U-SHAPED	80009	348-0085-00
	358-0166-00	B292408	B359999X	1		. GROMMET,PLASTIC:BLACK	80009	358-0166-00
-112	351-0324-00			2		. GUIDE,CKT BD:3.023 LONG,DELRIN	80009	351-0324-00
-113	131-0773-00	B010100	B359999X	1		. LEAD,ELECTRICAL:18.0 INCH LONG	01009	8111LFD
-114	337-1538-01	B010100	B359999	1		. SHIELD,ELEC:HIGH VOLTAGE	80009	337-1538-01
	337-1538-02	B360000		1		. SHIELD,ELEC:HIGH VOLTAGE	80009	337-1538-02
						(ATTACHING PARTS)		
-115	211-0504-00			3		. SCREW,MACHINE:6-32 X 0.25 INCH,PNH STL	83385	OBD
						- - - * - - -		
-116	343-0002-00	B010100	B241831X	1		CLAMP,LOOP:0.188 INCH DIA	95987	3-16-6B
						(ATTACHING PARTS)		
-117	211-0503-00	B010100	B241831X	1		SCREW,MACHINE:6-32 X 0.188 INCH,PNH STL	83385	OBD
-118	210-0863-00	B010100	B241831X	1		WSHR,LOOP CLAMP:FOR 0.50" WIDE CLAMP,STL	95987	C191
						- - - * - - -		
	672-0572-00	XB300000		1		CKT BOARD ASSY:PROTECTION AND READOUT	80009	672-0572-00
-119	----- -----	XB300000		1		. CKT BOARD ASSY:PROTECTION(SEE A18 EPL)		
-120	253-0162-00	XB300000	B365099	FT		. . TAPE,PRESS,SENS:0.062 THK X 0.125" WIDE	04963	4116
	253-0160-00	B365100		FT		. . TAPE,PRESS.SENS:ADHESIVE,2.124 FT LONG	04963	4116 TYPE A
-121	131-0589-00	XB300000		20		. . TERM,PIN:0.46 L X 0.025 SQ.PH BRZ GL	22526	47350
-122	210-0702-00	XB200000		2		. . EYELET,METALLIC:0.047 OD X 0.125 INCH LONG	07707	S6127
-123	----- -----			1		. CKT BOARD ASSY:READOUT(SEE A12 EPL)		
-124	131-0608-00			42		. . TERMINAL,PIN:0.365 L X 0.25 PH,BRZ,GOLD PL	22526	47357
-125	131-1003-00			6		. . CONNECTOR BODY,:CKT BD MT,2 PRONG	80009	131-1003-00
-126	136-0235-00			1		. . SOCKET,PLUG-IN:6 CONTACT,ROUND	71785	133-96-12-062
-127	136-0252-04			42		. . SOCKET,PIN TERM:0.188 INCH LONG	22526	75060-007
	136-0252-01			14		. . CONTACT,ELEC:0.178 INCH LONG	00779	1-332095-2
-128	136-0260-01			14		. . SOCKET,PLUG-IN:16 CONTACT,RECT SHAPE	71785	133-51-02-075
-129	136-0269-00			3		. . SOCKET,PLUG-IN:14 CONTACT,LOW CLEARANCE	73803	CS9002-14
-130	214-0579-00	B010100	B299999	21		. . TERM.,TEST PT:BRS CD PL	80009	214-0579-00
	214-0579-00	B300000		20		. . TERM.,TEST PT:BRS CD PL	80009	214-0579-00
-131	260-0723-00			1		. . SWITCH,SLIDE:DPDT,0.5A,125VAC	79727	GF126-0028
						(ATTACHING PARTS FOR CKT BD)		
-132	211-0205-00			1		. SCREW MACHINE:RDH SST	80009	211-0205-00
-133	361-0527-00			1		. SPACER,CKT CARD:0.188 OD X 0.13 INCH LONG	80009	361-0527-00
						- - - * - - -		

Fig. & Index No.	Tektronix Part No.	Serial/Model No. Eff	Dscont	Qty	1 2 3 4 5	Name & Description	Mfr Code	Mfr Part Number
2-134	343-0213-00			1		CLAMP,LOOP:PRESS MT,PLASTIC	80009	343-0213-00
-135	343-0004-00			1		CLAMP,LOOP:0.312 INCH DIAMETER,PLSTC	95987	5-16-6B
						(ATTACHING PARTS)		
-136	211-0511-00			1		SCREW,MACHINE:6-32 X 0.50 INCH,PNH STL	83385	OBD
-137	210-0863-00			1		WSHR,LOOP CLAMP:FOR 0.50" WIDE CLAMP,STL	95987	C191
						- - - * - - -		
-138	----- -----			1		CKT BOARD ASSY:RECTIFIER(SEE A13 EPL)		
-139	131-0608-00			28		. TERMINAL,PIN:0.365 L X 0.25 PH,BRZ,GOLD PL	22526	47357
-140	136-0252-04	B010100	B161209	6		. SOCKET,PIN TERM:0.188 INCH LONG	22526	75060-007
	136-0350-00	B161210	B365764	2		. SOCKET,PLUG-IN:3 PIN,LOW PROFILE	80009	136-0350-00
	136-0252-04	B365765		6		. SOCKET,PIN TERM:0.188 INCH LONG	22526	75060-007
-141	214-1292-00			2		. HEAT SINK,ELEC:TRANSISTOR	05820	205-AB
-142	214-1731-00	B010100	B050499	1		. HEAT SINK,ELEC:TRANSISTOR	80009	214-1731-00
	214-1731-01	B050500		1		. HEAT SINK,ELEC:TRANSISTOR	80009	214-1731-01
						(ATTACHING PARTS)		
-143	211-0014-00	B010100	B333238	1		. SCREW,MACHINE:4-40 X 0.50 INCH,PNH STL	83385	OBD
	211-0016-00	B333239		1		. SCREW,MACHINE:4-40 X 0.625 INCH,PNH STL	83385	OBD
-144	210-0586-00			1		. NUT,PLAIN,EXT W:4-40 X 0.25 INCH,STL	78189	211-041800-00
-145	210-0935-00			1		. WASHER,NONMETAL:FIBER,0.14 IDX 0.375"OD	74921	OBD
-146	210-0851-00	XB333239		1		. WASHER,FLAT:0.119 ID X 0.375 INCH OD,STL	12327	OBD
						- - - * - - -		
-147	131-0566-00			1		. LINK,TERM.CONNE:0.086 DIA X 2.375 INCH L	55210	L-2007-1
-148	344-0154-00			4		. CLIP,ELECTRICAL:FOR 0.25 INCH DIA FUSE	80009	344-0154-00
						(ATTACHING PARTS FOR CKT BD)		
-149	211-0507-00			2		SCREW,MACHINE:6-32 X 0.312 INCH,PNH STL	83385	OBD
-150	211-0511-00			1		SCREW,MACHINE:6-32 X 0.50 INCH,PNH STL	83385	OBD
-151	211-0008-00	XB050500		1		SCREW,MACHINE:4-40 X 0.25 INCH,PNH STL	83385	OBD
						- - - * - - -		
-152	----- -----			1		TRANSFORMER:(SEE T801 EPL)		
						(ATTACHING PARTS)		
-153	212-0522-00			2		SCREW,MACHINE:10-32 X 2.50",HEX HD STL	83385	OBD
-154	210-0812-00			2		WASHER,NONMETAL:#10,FIBER	86445	OBD
-155	166-0457-00			2		INSUL SLVG,ELEC:0.19 ID X 1.875"LONG MYLAR	80009	166-0457-00
						- - - * - - -		
-156	407-1837-00	XB333239		1		BRACKET,CKT BD:POLYCARBONATE	80009	407-1837-00
						(ATTACHING PARTS)		
-157	220-0410-00	XB333239		1		NUT,EXTENDED WA:10-32 X 0.375 INCH,STL	83385	OBD
-158	212-0522-00	XB333239		1		SCREW,MACHINE:10-32 X 2.50",HEX HD STL	83385	OBD
-159	210-0805-00	XB333239		1		WASHER,FLAT:0.204 ID X 0.438 INCH OD,STL	12327	OBD
-160	166-0457-00	XB333239		1		INSUL SLVG,ELEC:0.19 ID X 1.875"LONG MYLAR	80009	166-0457-00
						- - - * - - -		
-161	407-0921-00			1		BRACKET,XFMR:ALUMINUM	80009	407-0921-00
						(ATTACHING PARTS)		
-162	212-0023-00			2		SCREW,MACHINE:8-32 X 0.375 INCH,PNH STL	83385	OBD
-163	210-0804-00	XB020734		2		WASHER,FLAT:0.17 ID X 0.375 INCH OD,STL	12327	OBD
						- - - * - - -		
-164	----- -----			1		SW,THERMOSTATIC:(SEE S1000 EPL)		
						(ATTACHING PARTS)		
-165	211-0008-00			2		SCREW,MACHINE:4-40 X 0.25 INCH,PNH STL	83385	OBD
-166	210-0586-00			2		NUT,PLAIN,EXT W:4-40 X 0.25 INCH,STL	78189	211-041800-00
						- - - * - - -		
-167	441-0993-01			1		CHASSIS,SCOPE:POWER SUPPLY	80009	441-0993-01
						(ATTACHING PARTS)		
-168	212-0040-00			6		SCREW,MACHINE:8-32 X 0.375 100 DEG,FLH STL	83385	OBD
						- - - * - - -		
	614-0104-00	B0101000	B282244	1		SUBPANEL ASSY:REAR,SIG OUT	80009	614-0104-00
	614-0140-03	B282245		1		SUBPANEL ASSY:REAR	80009	614-0140-03
-169	352-0076-03			1		. FUSEHOLDER:W/HARDWARE	75915	342012
-170	210-0873-00			1		. WASHER,NONMETAL:0.5 ID X 0.688 INCH OD,NPRN	70485	OBD
-171	200-1388-00	B010100	B282279	1		. COVER,FUSE LEAD:	80009	200-1388-00
	200-1388-01	B282280		1		. COVER,FUSE:	80009	200-1388-01
-172	131-0955-00			6		. CONNECTOR,RCPT,:BNC,FEMALE,W/HARDWARE	13511	31-279
-173	210-0255-00			1		. TERMINAL,LUG:0.391" ID INT TOOTH	80009	210-0255-00

Fig. & Index No.	Tektronix Part No.	Serial/Model No. Eff	Dscont	Qty	1 2 3 4 5	Name & Description	Mfr Code	Mfr Part Number
2-174	210-0202-00	B010100	B282244	1		. TERMINAL,LUG:0.146 ID,LOCKING,BRZ TINNED	78189	2104-06-00-2520N
	210-0202-00	B282245		2		. TERMINAL,LUG:0.146 ID,LOCKING,BRZ TINNED	78189	2104-06-00-2520N
						(ATTACHING PARTS)		
-175	211-0504-00	B010100	B282244	1		. SCREW,MACHINE:6-32 X 0.25 INCH,PNH STL	83385	OBD
	211-0507-00	B282245		2		. SCREW,MACHINE:6-32 X 0.312 INCH,PNH STL	83385	OBD
-176	210-0407-00	B010100	B282244	1		. NUT,PLAIN,HEX.:6-32 X 0.25 INCH,BRS	73743	3038-0228-402
	210-0407-00	B282245		2		. NUT,PLAIN,HEX.:6-32 X 0.25 INCH,BRS	73743	3038-0228-402
						- - - * - - -		
-177	161-0033-09			1		. CABLE ASSY,PWR,:3 WIRE,92 INCH LONG	80009	161-0033-09
-178	358-0323-00			1		. BSHG,STRAIN RLF:90 DEG,0.515 DIA HOLE	28520	SR15-1
-179	----- ----			1		. CKT BOARD ASSY:SIGNAL OUT(SEE A7 EPL)		
-180	131-0608-00			11		. . TERMINAL,PIN:0.365 L X 0.25 PH,BRZ,GOLD PL	22526	47357
-181	131-1003-00			2		. . CONNECTOR BODY,:CKT BD MT,2 PRONG	80009	131-1003-00
-182	136-0252-01			2		. . CONTACT,ELEC:0.178 INCH LONG	00779	1-332095-2
	136-0252-04	B010100	B161209	27		. . SOCKET,PIN TERM:0.188 INCH LONG	22526	75060-007
-183	136-0350-00	B161210	B365764	9		. . SOCKET,PLUG-IN:3 PIN,LOW PROFILE	80009	136-0350-00
	136-0252-04	B365765		27		. . SOCKET,PIN TERM:0.188 INCH LONG	22526	75060-007
-184	260-0984-00			1		. . SWITCH,SLIDE:DP 3 POSN,0.5A,125VAC-DC	79727	G-128-S-0012
-185	214-0579-00			1		. . TERM.,TEST PT:BRS CD PL	80009	214-0579-00
						(ATTACHING PARTS FOR CKT BD)		
-186	211-0008-00			2		. SCREW,MACHINE:4-40 X 0.25 INCH,PNH STL	83385	OBD
						- - - * - - -		
-187	385-0149-00			1		. SPACER,POST:0.625 L W/4-40 THD EA END,NYL	80009	385-0149-00
						(ATTACHING PARTS)		
-188	211-0008-00			1		. SCREW,MACHINE:4-40 X 0.25 INCH,PNH STL	83385	OBD
						- - - * - - -		
-189	210-0201-00			1		. TERMINAL,LUG:SE #4	86928	A373-157-2
						(ATTACHING PARTS)		
-190	211-0008-00			1		. SCREW,MACHINE:4-40 X 0.25 INCH,PNH STL	83385	OBD
						- - - * - - -		
-191	348-0191-00			4		. LEG,ELEC EQUIP.:PLASTIC	80009	348-0191-00
						(ATTACHING PARTS FOR EACH)		
-192	211-0529-00			1		. SCREW,MACHINE:6-32 X 1.25 INCHES,PNH STL	83385	OBD
						- - - * - - -		
-193	386-2199-00			1		PANEL,REAR:POWER	80009	386-2199-00
-194	337-1756-00			1		SHIELD,ELEC:	80009	337-1756-00
-195	----- -----			1		MOTOR,AC:(SEE B1001 EPL)		
						(ATTACHING PARTS)		
-196	210-1112-00	B010100	B354849	2		WASHER,FLAT:0.228 ID X 0.375 I OD,PLSTC	80009	210-1112-00
	210-1003-00	B354850		2		WASHER,FLAT:# 10 X 0.036 THICK,BRS	12327	OBD
-197	212-0557-00			2		SCREW,MACHINE:10-32 X 0.50 INCH,RDH SST	83385	OBD
						- - - * - - -		
-198	369-0037-01			1		IMPLR,FAN,AXIAL:3.5 DIA BL,CW,0.125 ID	52792	3500-CW125W
-199	378-0811-00			1		BAFFLE,AIR:	80009	378-0811-00
						(ATTACHING PARTS)		
-200	211-0008-00			4		SCREW,MACHINE:4-40 X 0.25 INCH,PNH STL	83385	OBD
						- - - * - - -		
-201	----- -----			1		CKT BOARD ASSY:REGULATOR(SEE A14 EPL)		
-202	131-0608-00	B010100	B209999	45		. TERMINAL,PIN:0.365 L X 0.25 PH,BRZ,GOLD PL	22526	47357
	131-0608-00	B210000		47		. TERMINAL,PIN:0.365 L X 0.25 PH,BRZ,GOLD PL	22526	47357
-203	131-0847-00			12		. TERMINAL STUD:6-32 X 0.435 INCH LONG	80009	131-0847-00
-204	136-0183-00			3		. SOCKET,PLUG-IN:3 PIN,ROUND	80009	136-0183-00
-205	136-0235-00			6		. SOCKET,PLUG-IN:6 CONTACT,ROUND	71785	133-96-12-062
-206	136-0252-04	B010100	B161209	36		. SOCKET,PIN TERM:0.188 INCH LONG	22526	75060-007
	136-0252-04	B161210		9		. SOCKET,PIN TERM:0.188 INCH LONG	22526	75060-007
-207	136-0350-00	B161210	B365888	9		. SOCKET,PLUG-IN:3 PIN,LOW PROFILE	80009	136-0350-00
	136-0252-04	B365889		27		. SOCKET,PIN TERM:0.188 INCH LONG	22526	75060-007
-208	136-0269-02			1		. SOCKET,PLUG-IN:14 CONTACT,LOW CLEARANCE	01295	C95140
-209	136-0361-00			6		. SPACER,XSTR:	80009	136-0361-00
-210	136-0384-00			12		. SOCKET,PIN TERM:FOR 0.04 DIAMETER PIN	00779	52120
-211	214-1291-00			3		. HEAT SINK,ELEC:XSTR,0.72 OD X 0.375"H	05820	207-AB
-212	344-0154-00	B010100	B209999X	2		. CLIP,ELECTRICAL:FOR 0.25 INCH DIA FUSE	80009	344-0154-00
-213	441-1129-00			1		CHAS,ELEK EQPT:	80009	441-1129-00
						(ATTACHING PARTS)		
-214	211-0538-00			4		SCREW,MACHINE:6-32 X 0.312"100 DEG,FLH STL	83385	OBD
						- - - * - - -		

Fig. & Index No.	Tektronix Part No.	Serial/Model No. Eff	Dscont	Qty	1 2 3 4 5	Name & Description	Mfr Code	Mfr Part Number
2-215	----- -----			6		TRANSISTORS:(SEE Q874,988,933,958,903,850 EPL)		
						(ATTACHING PARTS FOR EACH)		
-216	211-0511-00	B010100	B282334	2		SCREW,MACHINE:6-32 X 0.50 INCH,PNH STL	83385	OBD
	211-0578-00	B283335		2		SCREW,MACHINE:6-32 X 0.438 INCH,PNH STL	83385	OBD
-217	386-0978-00			1		INSULATOR,PLATE:TRANSISTOR,MICA	80009	386-0978-00
						- - - * - - -		
-218	337-1757-00			1		SHIELD,ELEC:	80009	337-1757-00
						(ATTACHING PARTS)		
-219	211-0008-00			4		SCREW,MACHINE:4-40 X 0.25 INCH,PNH STL	83385	OBD
						- - - * - - -		
-220	352-0171-00			5		HLDR,TERM CONN:1 WIRE BLACK	80009	352-0171-00
-221	352-0169-00	B010100	B282304	4		HLDR,TERM CONN:2 WIRE BLACK	80009	352-0169-00
	352-0169-00	B282305		3		HLDR,TERM CONN:2 WIRE BLACK	80009	352-0169-00
	352-0169-01			3		CONN BODY,PL,EL:2 WIRE BROWN	80009	352-0169-01
	352-0169-03			2		CONN BODY,PL,EL:2 WIRE ORANGE	80009	352-0169-03
	352-0169-04			2		CONN BODY,PL,EL:2 WIRE YELLOW	80009	352-0169-04
	352-0169-08			2		CONN BODY,PL,EL:2 WIRE GRAY	80009	352-0169-08
	352-0169-09			2		CONN BODY,PL,EL:2 WIRE WHITE	80009	352-0169-09
-222	352-0161-00			4		HLDR,TERM CONN:3 WIRE BLACK	80009	352-0161-00
	352-0161-02			3		CONN BODY,PL,EL:3 WIRE RED	80009	352-0161-02
	352-0161-07			2		CONN BODY,PL,EL:3 WIRE VIOLET	80009	352-0161-07
	352-0161-09			2		CONN BODY,PL,EL:3 WIRE WHITE	80009	352-0161-09
-223	352-0162-01			4		CONN BODY,PL,EL:4 WIRE BROWN	80009	352-0162-01
	352-0162-04			1		CONN BODY,PL,EL:4 WIRE YELLOW	80009	352-0162-04
	352-0162-05			4		CONN BODY,PL,EL:4 WIRE GREEN	80009	352-0162-05
	352-0162-09			2		CONN BODY,PL,EL:4 WIRE WHITE	80009	352-0162-09
-224	352-0163-00			1		CONN BODY,PL,EL:5 WIRE BLACK	80009	352-0163-00
	352-0163-01			4		CONN BODY,PL,EL:5 WIRE BROWN	80009	352-0163-01
	352-0163-02			1		CONN BODY,PL,EL:5 WIRE RED	80009	352-0163-02
	352-0163-05			5		CONN BODY,PL,EL:5 WIRE GREEN	80009	352-0163-05
	352-0163-06			2		CONN BODY,PL,EL:5 WIRE BLUE	80009	352-0163-06
-225	352-0164-01			2		CONN BODY,PL,EL:6 WIRE BROWN	80009	352-0164-01
-226	352-0165-00			2		CONN BODY,PL,EL:7 WIRE BLACK	80009	352-0165-00
-227	352-0166-00			4		CONN BODY,PL,EL:8 WIRE BLACK	80009	352-0166-00
	352-0166-01			2		CONN BODY,PL,EL:8 WIRE BROWN	80009	352-0166-01
	352-0166-02			2		CONN BODY,PL,EL:8 WIRE RED	80009	352-0166-02
	352-0166-03			2		CONN BODY,PL,EL:8 WIRE ORANGE	80009	352-0166-03
-228	352-0167-00			2		HLDR,TERM CONN:9 WIRE BLACK	80009	352-0167-00
-229	352-0168-00			2		CONN BODY,PL,EL:10 WIRE BLACK	80009	352-0168-00
	352-0168-02			2		CONN BODY,PL,EL:10 WIRE RED	80009	352-0168-02
	352-0168-05			4		CONN BODY,PL,EL:10 WIRE GREEN	80009	352-0168-05
	352-0168-07			4		CONN BODY,PL,EL:10 WIRE VIOLET	80009	352-0168-07
-230	131-0707-00	B010100	B282304	337		CONNECTOR,TERM.:22-26 AWG,BRS& CU BE GOLD	22526	47439
	131-0707-00	B0282305		235		CONNECTOR,TERM.:22-26 AWG,BRS& CU BE GOLD	22526	47439
-231	131-0708-00			14		CONTACT,ELEC:0.48"L,28-32 AWG WIRE	22526	47437
-232	210-0775-00			9		EYELET,METALLIC:0.126 OD X 0.23 INCH L,BRS	80009	210-0775-00
-233	210-0774-00			9		EYELET,METALLIC:0.152 OD X 0.245 INCH L,BRS	80009	210-0774-00
-234	179-1825-00			1		WIRING HARNESS,:VERTICAL SIGNAL	80009	179-1825-00
	131-0707-00			3		. CONNECTOR,TERM.:22-26 AWG,BRS& CU BE GOLD	22526	47439
	131-0708-00			1		. CONTACT,ELEC:0.48"L,28-32 AWG WIRE	22526	47437
	352-0162-09			1		. CONN BODY,PL,EL:4 WIRE WHITE	80009	352-0162-09
	210-0775-00			2		. EYELET,METALLIC:0.126 OD X 0.23 INCH L,BRS	80009	210-0775-00
	210-0774-00			2		. EYELET,METALLIC:0.152 OD X 0.245 INCH L,BRS	80009	210-0774-00
	179-1826-00			1		WIRING HARNESS,:SWEEP GATE	80009	179-1826-00
	131-0707-00			8		. CONNECTOR,TERM.:22-26 AWG,BRS& CU BE GOLD	22526	47439
	131-0708-00			8		. CONTACT,ELEC:0.48"L,28-32 AWG WIRE	22526	47437
	352-0166-03			2		. CONN BODY,PL,EL:8 WIRE ORANGE	80009	352-0166-03
	179-1828-00			1		WIRING HARNESS,:RESET	80009	179-1828-00
	131-0707-00			2		. CONNECTOR,TERM.:22-26 AWG,BRS& CU BE GOLD	22526	47439
	131-0708-00			2		. CONTACT,ELEC:0.48"L,28-32 AWG WIRE	22526	47437
	352-0169-05			1		. CONN BODY,PL,EL:2 WIRE GREEN	80009	352-0169-05
	352-0169-09			1		. CONN BODY,PL,EL:2 WIRE WHITE	80009	352-0169-09
-235	175-0825-00			FT		WIRE,ELECTRICAL:2 WIRE RIBBON	80009	175-0825-00

Fig. & Index No.	Tektronix Part No.	Serial/Model No. Eff	Dscont	Qty	1 2 3 4 5	Name & Description	Mfr Code	Mfr Part Number
2-236	175-0826-00			FT		WIRE,ELECTRICAL:3 WIRE RIBBON	80009	175-0826-00
-237	175-0827-00			FT		WIRE,ELECTRICAL:4 WIRE RIBBON	08261	SS-0426-710610C
-238	175-0828-00			FT		WIRE,ELECTRICAL:5 WIRE RIBBON	08261	OBD
-239	175-0829-00			FT		WIRE,ELECTRICAL:6 WIRE RIBBON	08261	SS-0626-710610C
-240	175-0830-00			FT		WIRE,ELECTRICAL:7 WIRE RIBBON	08261	SS-0726-710610C
-241	175-0831-00			FT		WIRE,ELECTRICAL:8 WIRE RIBBON	08261	OBD
-242	175-0833-00			FT		WIRE,ELECTRICAL:10 WIRE RIBBON	08261	OBD
	175-0855-00			FT		WIRE,ELECTRICAL:10 WIRE RIBBON	08261	SS-1022(1061)0C
-243	200-1075-00			4		COVER,ELEC CONN:PLASTIC	00779	1-480435-0
-244	131-0861-00			4		TERM,QIK DISC:16-20 AWG,0.22 W X 0.02 THK	00779	42617-2
	195-0215-00			1		WIRE SET,ELEC:	80009	195-0215-00
	131-0707-00			150		. CONNECTOR,TERM.:22-26 AWG,BRS& CU BE GOLD	22526	47439
	131-0708-00			12		. CONTACT,ELEC:0.48"L,28-32 AWG WIRE	22526	47437
	175-0825-00			FT		. WIRE,ELECTRICAL:2 WIRE RIBBON	80009	175-0825-00
	175-0826-00			FT		. WIRE,ELECTRICAL:3 WIRE RIBBON	80009	175-0826-00
	175-0827-00			FT		. WIRE,ELECTRICAL:4 WIRE RIBBON	08261	SS-0426-710610C
	175-0829-00			FT		. WIRE,ELECTRICAL:6 WIRE RIBBON	08261	SS-0626-710610C
	175-0830-00			FT		. WIRE,ELECTRICAL:7 WIRE RIBBON	08261	SS-0726-710610C
	175-0831-00			FT		. WIRE,ELECTRICAL:8 WIRE RIBBON	08261	OBD
	175-0833-00			FT		. WIRE,ELECTRICAL:10 WIRE RIBBON	08261	OBD
	175-0855-00			FT		. WIRE,ELECTRICAL:10 WIRE RIBBON	08261	SS-1022(1061)0C
	175-0857-00			FT		. WIRE,ELECTRICAL:8 WIRE RIBBON	08261	SS-0822-1910610C
	352-0161-00			1		. HLDR,TERM CONN:3 WIRE BLACK	80009	352-0161-00
	352-0161-03			1		. CONN BODY,PL,EL:3 WIRE ORANGE	80009	352-0161-03
	352-0161-08			1		. CONN BODY,PL,EL:3 WIRE GRAY	80009	352-0161-08
	352-0162-01			4		. CONN BODY,PL,EL:4 WIRE BROWN	80009	352-0162-01
	352-0162-09			1		. CONN BODY,PL,EL:4 WIRE WHITE	80009	352-0162-09
	352-0163-03			1		. CONN BODY,PL,EL:5 WIRE ORANGE	80009	352-0163-03
	352-0164-00			2		. CONN BODY,PL,EL:6 WIRE BLACK	80009	352-0164-00
	352-0164-01			2		. CONN BODY,PL,EL:6 WIRE BROWN	80009	352-0164-01
	352-0164-09			1		. CONN BODY,PL,EL:6 WIRE WHITE	80009	352-0164-09
	352-0165-00			2		. CONN BODY,PL,EL:7 WIRE BLACK	80009	352-0165-00
	352-0166-00			4		. CONN BODY,PL,EL:8 WIRE BLACK	80009	352-0166-00
	352-0166-01			2		. CONN BODY,PL,EL:8 WIRE BROWN	80009	352-0166-01
	352-0168-00			2		. CONN BODY,PL,EL:10 WIRE BLACK	80009	352-0168-00
	352-0168-02			2		. CONN BODY,PL,EL:10 WIRE RED	80009	352-0168-02
	352-0169-00			1		. HLDR,TERM CONN:2 WIRE BLACK	80009	352-0169-00
	352-0169-01			1		. CONN BODY,PL,EL:2 WIRE BROWN	80009	352-0169-01
	352-0169-04			2		. CONN BODY,PL,EL:2 WIRE YELLOW	80009	352-0169-04
	352-0169-08			3		CONN BODY,PL,EL:2 WIRE GRAY	80009	352-0169-08

Fig. & Index No.	Tektronix Part No.	Serial/Model No. Eff	Dscont	Qty	1 2 3 4 5	Name & Description	Mfr Code	Mfr Part Number
3-1	426-0514-00			1		FRAME,MASK:PLASTIC	80009	426-0514-00
-2	378-0625-08			1		FILTER,LT,CRT:GREEN	80009	378-0625-08
-3	331-0258-03			1		MASK,CRT SCALE:	80009	331-0258-03
-4	204-0380-00			1		BODY,TERMINAL:	80009	204-0380-00
-5	131-0765-00			3		TERM,FEEDTHRU:0.584 L X 0.625 OD BRS	80009	131-0765-00
-6	200-0939-01			1		RTNR,CRT SCALE:5.55 X 5.068 X 0.475,AL	80009	200-0939-01
						(ATTACHING PARTS)		
-7	212-0023-00	B010100	B353773	4		SCREW,MACHINE:8-32 X 0.375 INCH,PNH STL	83385	OBD
	212-0008-00	B353774		4		SCREW,MACHINE:8-32 X 0.500 INCH,PNH STL	83385	OBD
-8	131-1022-00	XB230000		2		CONTACT,ELEC:CRT MASK	80009	131-1022-00
						- - - * - - -		
-9	337-1159-00	B010100	B354679	1		WINDOW,OBS:4.78 X 3.93 X 0.07"PLSTC	80009	337-1159-00
	337-1159-03	B354680		1		SHLD,IMPLOSION:4.75 X 3.93 X0.7 THK,PLSTC	80009	337-1159-03
-10	331-0245-00			1		MASK,CRT SCALE:	80009	331-0245-00
-11	333-1509-00			1		PANEL,FRONT:LEFT	80009	333-1509-00
-12	386-1884-03			1		SUPPORT,CRT:FRONT	80009	386-1884-03
-13	386-1517-00			4		. SUPPORT,CRT:FRONT	80009	386-1517-00
						(ATTACHING PARTS)		
-14	212-0040-00			2		SCREW,MACHINE:8-32 X 0.375 100 DEG,FLH STL	83385	OBD
	211-0589-00			2		SCREW,MACHINE:6-32 X 0.312 INCH,PNH BRS	83385	OBD
-15	211-0510-00			2		SCREW,MACHINE:6-32 X 0.375 INCH,PNH STL	83385	OBD
						- - - * - - -		
-16	348-0031-00			1		GROMMET,PLASTIC:0.156 INCH DIA	80009	348-0031-00
-17	----- -----			1		CKT BOARD ASSY:GRATICULE LIGHT(SEE A17 EPL)		
-18	378-0614-00			1		. REFLECTOR,LIGHT:MOLDED PLASTIC	80009	378-0614-00
-19	344-0179-00			2		. CLIP,REFL RTNG:PLASTIC	80009	344-0179-00
						(ATTACHING PARTS)		
-20	211-0062-00			1		. SCREW,MACHINE:2-56 X 0.312 INCH,RDH STL	83385	OBD
						- - - * - - -		
-21	366-1402-02			2		PUSH BUTTON:LEFT	80009	366-1402-02
-22	366-1402-03			1		PUSH BUTTON:ALT	80009	366-1402-03
-23	366-1402-04			1		PUSH BUTTON:ADD	80009	366-1402-04
-24	366-1257-31			1		PUSH BUTTON:SIL GRAY,CHOP	80009	366-1257-31
-25	366-1402-06			2		PUSH BUTTON:RIGHT	80009	366-1402-06
-26	366-1402-07			1		PUSH BUTTON:VERT MODE	80009	366-1402-07
-27	366-1402-08			1		PUSH BUTTON:NON STORE	80009	366-1402-08
-28	366-1402-18			1		PUSH BUTTON:STORE	80009	366-1402-18
-29	366-1402-21			1		PUSH BUTTON:SAVE	80009	366-1402-21
-30	366-1257-84			1		PUSH BUTTON:GRAY--ERASE	80009	366-1257-84
-31	366-1480-01			1		PUSH BUTTON:ON/OFF	80009	366-1480-01
-32	136-0387-01			1		JACK,TIP:BLACK	71279	450-4252-01-0310
-33	136-0387-00			3		JACK,TIP:GRAY	71279	450-4352-01-0318
-34	366-1207-00			1		KNOB:GRAY	80009	366-1207-00
	213-0153-00			1		. SETSCREW:5-40 X 0.125,STL BK OXD,HEX	000CY	OBD
-35	366-1077-00			1		KNOB:GRAY	80009	366-1077-00
	213-0153-00			1		. SETSCREW:5-40 X 0.125,STL BK OXD,HEX	000CY	OBD
-36	366-1391-00			1		KNOB:GRAY	80009	366-1391-00
	213-0140-00			1		. SETSCREW:2-56 X 0.94 INCH,HEX SOC STL	70276	OBD
-37	366-1215-00			1		KNOB:GRAY	80009	366-1215-00
	213-0153-00			1		. SETSCREW:5-40 X 0.125,STL BK OXD,HEX	000CY	OBD
-38	366-1059-00			1		PUSH BUTTON:GRAY	80009	366-1059-00
-39	366-1077-00			1		KNOB:GRAY	80009	366-1077-00
	213-0153-00			1		. SETSCREW:5-40 X 0.125,STL BK OXD,HEX	000CY	OBD
-40	366-1391-00			1		KNOB:GRAY	80009	366-1391-00
	213-0140-00			1		. SETSCREW:2-56 X 0.94 INCH,HEX SOC STL	70276	OBD
-41	426-0681-00			13		FR,PUSH BUTTON:GRAY PLASTIC	80009	426-0681-00
-42	358-0378-00	B010100	B365351	1		BUSHING,SLEEVE:PRESS MOUNT	80009	358-0378-00
	358-0599-00	B365352		1		BUSHING,SLEEVE:0.125 ID X 0.234 THK,PLSTC	28520	B-187-125
-43	333-1612-00			1		PANEL,FRONT:	80009	333-1612-00
-44	----- -----			1		CKT BOARD ASSY:CAL AND MODE SWITCH(SEE A8 EPL)		
-45	131-0589-00			8		. TERM,PIN:0.46 L X 0.025 SQ.PH BRZ GL	22526	47350
	131-0608-00			37		. TERMINAL,PIN:0.365 L X 0.25 PH,BRZ,GOLD PL	22526	47357
-46	131-0993-00	XB282305		1		. BUS,CONDUCTOR:2 WIRE BLACK	00779	530153-2
-47	136-0252-04			12		. SOCKET,PIN TERM:0.188 INCH LONG	22526	75060-007

Fig. & Index No.	Tektronix Part No.	Serial/Model No. Eff	Dscont	Qty	1 2 3 4 5	Name & Description	Mfr Code	Mfr Part Number
3-48	260-1378-00			1		. SWITCH,PUSH:VERT MODE	71590	2KBC140000-608
-49	260-1379-00			1		. SWITCH,PUSH:TRIG SOURCE	71590	2KBC120000-595
-50	260-1441-00			1		. SWITCH,PUSH:2 STA,NON SHORT	80009	260-1441-00
-51	361-0411-00			14		. SPACER,PUSH SW:0.13 W X 0.375 INCH L,PLSTC	71590	J64285-00
-52	----- -----			1		. RESISTOR,VAR:(SEE R1048 EPL)		
						(ATTACHING PARTS)		
-53	210-0562-00			2		. NUT,PLAIN,HEX.:0.25-40 X 0.312 INCH,BBS	73743	2X20224-402
-54	210-0046-00			1		. WASHER,LOCK:INTL,0.26 ID X 0.40" OD,STL	78189	1214-05-00-0541C
						- - - * - - -		
-55	386-2285-00			1		. PL,VAR RES MTG:CIRCUIT BOARD	80009	386-2285-00
-56	220-0455-00			2		. NUT,BLOCK:0.281"SQ,THREE 4-40 THRU THDS	80009	220-0455-00
						(ATTACHING PARTS FOR EACH)		
57	211-0008-00			1		. SCREW,MACHINE:4-40 X 0.25 INCH,PNH STL	83385	OBD
						- - - * - - -		
						(ATTACHING PARTS FOR CKT BD)		
-58	211-0105-00			2		SCREW,MACHINE:4-40 X 0.188"100 DEG,FLH STL	83385	OBD
-59	211-0589-00			1		SCREW,MACHINE:6-32 X 0.312 INCH,PNH BRS	83385	OBD
						- - - * - - -		
-60	385-0016-00			1		SPACER,POST:1.0 L W/6-32 THD THRU,NYLON	80009	385-0016-00
						(ATTACHING PARTS)		
-61	211-0589-00			1		SCREW,MACHINE:6-32 X 0.312 INCH,PNH BRS	83385	OBD
						- - - * - - -		
-62	384-1136-00			3		EXTENSION SHAFT:0.95 INCH LONG	80009	384-1136-00
-63	376-0150-00	B010100	B039999X	1		CPLG,SHAFT,RGD:0.129 ID X 0.312 OD X 0.375	80009	376-0150-00
-64	384-1112-01	B010100	B039999X	1		EXTENSION SHAFT:1.910 INCH L,EPOXY GLASS	80009	384-1112-01
-65	----- -----			1		RESISTOR,VAR:(SEE R1477 EPL)		
						(ATTACHING PARTS)		
-66	210-0583-00			1		NUT,PLAIN,HEX.:0.25-32 X 0.312 INCH,BRS	73743	2X20224-402
-67	210-0940-00			1		WASHER,FLAT:0.25 ID X 0.375 INCH OD,STL	79807	OBD
-68	210-0223-01			1		TERMINAL,LUG:0.25 INCH DIA,SE,60 DEG BEND	86928	OBD
						- - - * - - -		
-69	----- -----			2		RESISTOR,VAR:(SEE R102A AND B,R1384 EPL)		
						(ATTACHING PARTS FOR EACH)		
-70	210-0583-00			1		NUT,PLAIN,HEX.:0.25-32 X 0.312 INCH,BRS	73743	2X20224-402
-71	210-0940-00			1		WASHER,FLAT:0.25 ID X 0.375 INCH OD,STL	79807	OBD
-72	210-0046-00			1		WASHER,LOCK:INTL,0.26 ID X 0.40" OD,STL	78189	1214-05-00-0541C
						- - - * - - -		
-73	----- -----			1		RESISTOR,VAR:(SEE R1095,S1030 EPL)		
						(ATTACHING PARTS)		
-74	210-0583-00			1		NUT,PLAIN,HEX.:0.25-32 X 0.312 INCH,BRS	73743	2X20224-402
-75	210-0940-00			1		WASHER,FLAT:0.25 ID X 0.375 INCH OD,STL	79807	OBD
-76	210-0046-00			1		WASHER,LOCK:INTL,0.26 ID X 0.40" OD,STL	78189	1214-05-00-0541C
						- - - * - - -		
-77	----- -----			1		CKT BOARD ASSY:NON STORE SW(SEE A16 EPL)		
-78	131-0608-00			6		. TERMINAL,PIN:0.365 L X 0.25 PH,BRZ,GOLD PL	22526	47357
-79	260-1442-00			1		. SWITCH,PUSH:2 STA,NON SHORT	80009	260-1442-00
-80	361-0411-00			4		. SPACER,PUSH SW:0.13 W X 0.375 INCH L,PLSTC	71590	J64285-00
-81	220-0637-00			1		. NUT,BLOCK:1.05 X 0.50 X0.188 INCH OA	80009	220-0637-00
						(ATTACHING PARTS)		
-82	211-0001-00			2		. SCREW,MACHINE:2-56 X 0.25 INCH,PNH STL	83385	OBD
						- - - * - - -		
						(ATTACHING PARTS FOR CKT BD)		
-83	211-0101-00			2		SCREW,MACHINE:4-40 X 0.25" 100 DEG,FLH STL	83385	OBD
						- - - * - - -		
-84	386-2119-00			1		SUBPANEL,FRONT:	80009	386-2119-00
						(ATTACHING PARTS)		
-85	211-0538-00			4		SCREW,MACHINE:6-32 X 0.312"100 DEG,FLH STL	83385	OBD
-86	211-0589-00			2		SCREW,MACHINE:6-32 X 0.312 INCH,PNH BRS	83385	OBD
						- - - * - - -		
	644-0437-01	B010100	B241859	1		POWER SW ASSY:	80009	644-0437-01
	644-0056-00	B241860		1		POWER SW ASSY:	80009	644-0056-00
-87	200-1318-00	B010100	B241859X	1		. COVER,SW ACTR:	80009	200-1318-00
-88	260-1368-01	B010100	B241859	2		. SWITCH,SENS:SPST,15A,250VAC	77342	A1-M1-361-6-33

Fig. & Index No.	Tektronix Part No.	Serial/Model No. Eff	Dscont	Qty	1 2 3 4 5	Name & Description	Mfr Code	Mfr Part Number
3-89	260-1709-00	B241860		1		. SWITCH,PUSH:POWER	77342	A9M1-762-6-3
						(ATTACHING PARTS)		
-90	211-0008-00	B241860		2		. SCREW,MACHINE:4-4O X 0.25 INCH,PNH STL	83385	OBD
						- - - * - - -		
-91	337-1760-00	B010100	B241859	1		. SHIELD,ELEC:POWER SWITCH	80009	337-1760-00
-92	200-1731-00	B241860		1		. COVER,ELEC SW:1.9 X 1.0 INCH	80009	200-1731-00
						(ATTACHING PARTS)		
-93	211-0020-00	B010100	B060759X	2		. SCREW,MACHINE:4-40 X 1.125 INCH,PNH STL	83385	OBD
	211-0021-00	B060760	B241859X	2		. SCREW,MACHINE:4-40 X 1.25 INCH,PNH STL	83385	OBD
-94	220-0665-00	B010100	B241859X	2		. NUT,PLAIN,HEX.:SLFLKG,4-40 X0.25",PLSTC	23050	OBD
-95	210-0405-00	XB241860		1		. NUT,PLAIN,HEX.:2-56 X 0.188 INCH,BRS	73743	2X12157-402
-96	211-0034-00	XB241860		1		. SCREW,MACHINE:2-56 X 0.50 INCH,PNH	83385	OBD
-97	210-0850-00	XB241860		1		. WASHER,FLAT:0.093 ID X 0.281 INCH OD	12327	OBD
						- - - * - - -		
-98	214-1689-00	B010100	B241859X	1		. ACTUATOR,SWITCH:	80009	214-1689-00
-99	214-1226-01	B010100	B241859X	1		. SPRING,HLCPS:0.18 OD X 0.44 INCH LONG	80009	214-1226-01
-100	210-0201-00			1		. TERMINAL,LUG:SE #4	86928	A373-157-2
						(ATTACHING PARTS)		
-101	210-0586-00			1		. NUT,PLAIN,EXT W:4-40 X 0.25 INCH,STL	78189	211-041800-00
						- - - * - - -		
-102	407-1570-00	XB241860		1		. BRACKET,ANGLE:POWER SWITCH,ALUMINUM	80009	407-1570-00
						(ATTACHING PARTS)		
-103	210-0586-00	XB241860		2		. NUT,PLAIN,EXT W:4-40 X 0.25 INCH,STL	78189	211-041800-00
						- - - * - - -		
-104	407-1653-00	XB241860		1		. BRACKET,ADAPTER:POWER SWITCH,ALUMINUM	80009	407-1653-00
						(ATTACHING PARTS)		
-105	210-0586-00			1		. NUT,PLAIN,EXT W:4-40 X 0.25 INCH,STL	78189	211-041800-00
						- - - * - - -		
-106	384-1183-00	B010100	B241859	1		EXTENSION SHAFT:8.731 INCH LONG,OA	80009	384-1183-00
	384-1060-00	B241860		1		EXTENSION SHAFT:7.831 INCH LONG	80009	384-1060-00
	384-1136-00	B241860		1		EXTENSION SHAFT:0.95 INCH LONG	80009	384-1136-00
-107	352-0084-02	XB030000		1		LAMPHOLDER:	80009	352-0084-02
-108	390-0229-00	B010100	B029999	1		COVER,SCOPE:TOP	80009	390-0229-00
	390-0229-01	B030000		1		COVER,SCOPE:	80009	390-0229-01
						(ATTACHING PARTS)		
-109	211-0007-00			6		SCREW,MACHINE:4-40 X 0.188 INCH,PNH STL	83385	OBD
-110	211-0101-00			2		SCREW,MACHINE:4-40 X 0.25" 100 DEG,FLH STL	83385	OBD
						- - - * - - -		
-111	211-0559-00			2		SCREW,MACHINE:6-32 X 0.375"100 DEG,FLH STL	83385	OBD
-112	351-0295-02			3		GUIDE,SLIDE:PLUG-IN,LWR	80009	351-0295-02
						(ATTACHING PARTS FOR EACH)		
-113	211-0105-00			1		SCREW,MACHINE:4-40 X 0.188"100 DEG,FLH STL	83385	OBD
-114	211-0101-00			1		SCREW,MACHINE:4-40 X 0.25" 100 DEG,FLH STL	83385	OBD
						- - - * - - -		
-115	200-1401-00			1		COVER,ACCESS:	80009	200-1401-00
						(ATTACHING PARTS)		
-116	211-0101-00			5		SCREW,MACHINE:4-40 X 0.25" 100 DEG,FLH STL	83385	OBD
						- - - * - - -		
-117	351-0305-01			3		GUIDE,PLUG-IN:UPPER	80009	351-0305-01
						(ATTACHING PARTS FOR EACH)		
-118	211-0105-00			1		SCREW,MACHINE:4-40 X 0.188"100 DEG,FLH STL	83385	OBD
						- - - * - - -		
-119	367-0138-00			2		HANDLE,BOW:U SHAPED	06540	14053-A-1032-1B
						(ATTACHING PARTS FOR EACH)		
-120	212-0518-00			2		SCREW,MACHINE:10-32 X 0.312 INCH,PNH STL	83385	OBD
						- - - * - - -		
-121	386-2054-00			1		SPRT,PWR SUPPLY:	80009	386-2054-00
						(ATTACHING PARTS)		
-122	211-0101-00			2		SCREW,MACHINE:4-40 X 0.25" 100 DEG,FLH STL	83385	OBD
						- - - * - - -		
-123	200-1448-00			1		COVER,ACCESS:	80009	200-1448-00
						(ATTACHING PARTS)		
-124	211-0008-00			6		SCREW,MACHINE:4-40 X 0.25 INCH,PNH STL	83385	OBD
						- - - * - - -		

Fig. & Index No.	Tektronix Part No.	Serial/Model No. Eff	Dscont	Qty	1 2 3 4 5	Name & Description	Mfr Code	Mfr Part Number
3-125	351-0313-00			PR		GUIDE,RACKMOUNT:19.218 INCH LONG,PAIR	80009	351-0313-00
						(ATTACHING PARTS)		
-126	210-0458-00			9		NUT,PLAIN,EXT W:8-32 X 0.344 INCH,STL	83385	OBD
						- - - * - - -		
-127	200-0103-00	XB070750		1		NUT,PLAIN,KNURL:0.25-28 X 0.375" OD,BRASS	80009	200-0103-00
-128	355-0131-00	XB070750		1		STUD,BDG POST:GROUND	80009	355-0131-00
						(ATTACHING PARTS)		
-129	212-0023-00	XB070750		1		SCREW,MACHINE:8-32 X 0.375 INCH,PNH STL	83385	OBD
-130	210-0008-00	XB070750		1		WASHER,LOCK:INTL,0.172 ID X 0.331"OD,STL	78189	1208-00-00-0541C
						- - - * - - -		
-131	129-0441-00	XB050000		2		POST,ELEC-MECH:0.125 OD X 5.045 INCH LONG	80009	129-0441-00
						(ATTACHING PARTS FOR EACH)		
-132	211-0087-01	XB050000		2		SCREW,MACHINE:2-56 X 0.188" 82 DEG,FLH,STL	83385	OBD
						- - - * - - -		
-133	----- -----			1		CKT BOARD ASSY:REGULATOR(SEE A14 EPL)		
-134	131-0608-00			45		. TERMINAL,PIN:0.365 L X 0.25 PH,BRZ,GOLD PL	22526	47357
-135	131-0847-00			12		. TERMINAL STUD:6-32 X 0.435 INCH LONG	80009	131-0847-00
-136	136-0183-00			3		. SOCKET,PLUG-IN:3 PIN,ROUND	80009	136-0183-00
-137	136-0235-00			6		. SOCKET,PLUG-IN:6 CONTACT,ROUND	71785	133-96-12-062
-138	136-0252-04	B010100	B251859	36		. SOCKET,PIN TERM:0.188 INCH LONG	22526	75060-007
	136-0252-04	B251860	B365888	38		. SOCKET,PIN TERM:0.188 INCH LONG	22526	75060-007
	136-0252-04	B365889		27		. SOCKET,PIN TERM:0.188 INCH LONG	22526	75060-007
-139	136-0269-02			1		. SOCKET,PLUG-IN:14 CONTACT,LOW CLEARANCE	01295	C95140
-140	136-0361-00			6		. SPACER,XSTR:	80009	136-0361-00
	136-0384-00			12		. SOCKET,PIN TERM:FOR 0.04 DIAMETER PIN	00779	52120
-141	214-1291-00			3		. HEAT SINK,ELEC:XSTR,0.72 OD X 0.375"H	05820	207-AB
-142	344-0154-00			2		. CLIP,ELECTRICAL:FOR 0.25 INCH DIA FUSE	80009	344-0154-00
-143	441-1060-01			1		CHAS,ELEC EQPT:MAIN	80009	441-1060-01
						(ATTACHING PARTS)		
-144	211-0538-00			1		SCREW,MACHINE:6-32 X 0.312"100 DEG,FLH STL	83385	OBD
-145	211-0507-00			2		SCREW,MACHINE:6-32 X 0.312 INCH,PNH STL	83385	OBD
-146	211-0025-00			2		SCREW,MACHINE:4-40 X 0.375 100 DEG,FLH STL	83385	OBD
						- - - * - - -		
-147	----- -----			6		TRANSISTOR:(SEE Q874,988,933,958,903,850 EPL)		
						(ATTACHING PARTS FOR EACH)		
-148	211-0511-00			2		SCREW,MACHINE:6-32 X 0.50 INCH,PNH STL	83385	OBD
-149	386-0978-00			1		INSULATOR,PLATE:TRANSISTOR,MICA	80009	386-0978-00
						- - - * - - -		
-150	337-1731-00			1		SHIELD,ELEC:	80009	337-1731-00
						(ATTACHING PARTS)		
-151	211-0507-00			4		SCREW,MACHINE:6-32 X 0.312 INCH,PNH STL	83385	OBD
						- - - * - - -		
-152	407-1145-02			1		BRACKET,HEAT SK:RIGHT,DELRIN	80009	407-1145-02
						(ATTACHING PARTS)		
-153	211-0504-00			2		SCREW,MACHINE:6-32 X 0.25 INCH,PNH STL	83385	OBD
						- - - * - - -		
-154	220-0614-00			1		NUT,BLOCK:0.375 X 1.25 X 0.347,(2)6-32	80009	220-0614-00
						(ATTACHING PARTS)		
-155	211-0507-00			2		SCREW,MACHINE:6-32 X 0.312 INCH,PNH STL	83385	OBD
						- - - * - - -		
-156	343-0004-00			1		CLAMP,LOOP:0.312 INCH DIAMETER,PLSTC	95987	5-16-6B
						(ATTACHING PARTS)		
-157	211-0511-00			1		SCREW,MACHINE:6-32 X 0.50 INCH,PNH STL	83385	OBD
-158	210-0863-00			1		WSHR,LOOP CLAMP:FOR 0.50" WIDE CLAMP,STL	95987	C191
-159	210-0457-00			1		NUT,PLAIN,EXT W:6-32 X 0.312 INCH,STL	83385	OBD
-160	210-0202-00			1		TERMINAL,LUG:0.146 ID,LOCKING,BRZ TINNED	78189	2104-06-00-2520N
						- - - * - - -		
-161	343-0004-00			3		CLAMP,LOOP:0.312 INCH DIAMETER,PLSTC	95987	5-16-6B
						(ATTACHING PARTS)		
-162	211-0510-00			1		SCREW,MACHINE:6-32 X 0.375 INCH,PNH STL	83385	OBD
-163	210-0863-00			1		WSHR,LOOP CLAMP:FOR 0.50" WIDE CLAMP,STL	95987	C191
						- - - * - - -		

Fig. & Index No.	Tektronix Part No.	Serial/Model No. Eff	Dscont	Qty	1 2 3 4 5	Name & Description	Mfr Code	Mfr Part Number
3-164	343-0006-00			1		CLAMP,LOOP:0.50 INCH DIAMETER,PLSTC	95987	1-2-6B
						(ATTACHING PARTS)		
-165	210-0457-00			1		NUT,PLAIN,EXT W:6-32 X 0.312 INCH,STL	83385	OBD
-166	210-0863-00			1		WSHR,LOOP CLAMP:FOR 0.50" WIDE CLAMP,STL	95987	C191
						- - - * - - -		
-167	386-2412-00	B010100	B365094	1		SPRT,CRT SHIELD:	80009	386-2412-00
	386-2412-01	B365095		1		SPRT,CRT SHIELD:	80009	386-2412-01
						(ATTACHING PARTS)		
-168	210-0457-00			3		NUT,PLAIN,EXT W:6-32 X 0.312 INCH,STL	83385	OBD
-169	211-0538-00			2		SCREW,MACHINE:6-32 X 0.312"100 DEG,FLH STL	83385	OBD
-170	211-0507-00			1		SCREW,MACHINE:6-32 X 0.312 INCH,PNH STL	83385	OBD
						- - - * - - -		
-171	437-0143-00	B010100	B090989	1		CABINET,SCOPE:	80009	437-0143-00
	437-0143-01	B090990		1		CABINET,SCOPE:	80009	437-0143-01
-172	348-0274-00	B010100	B090989	2		. SHLD GSKT,ELEC:	80009	348-0274-00
	348-0354-00	B090990		2		. SHLD GSKT,ELEC:8.10 INCH LONG	80009	348-0354-00
						(ATTACHING PARTS FOR EACH)		
-173	210-0632-00	B010100	B090989X	3		. EYELET,METALLIC:0.089 OD X 0.125"LONG,BRS	01881	3168
						- - - * - - -		

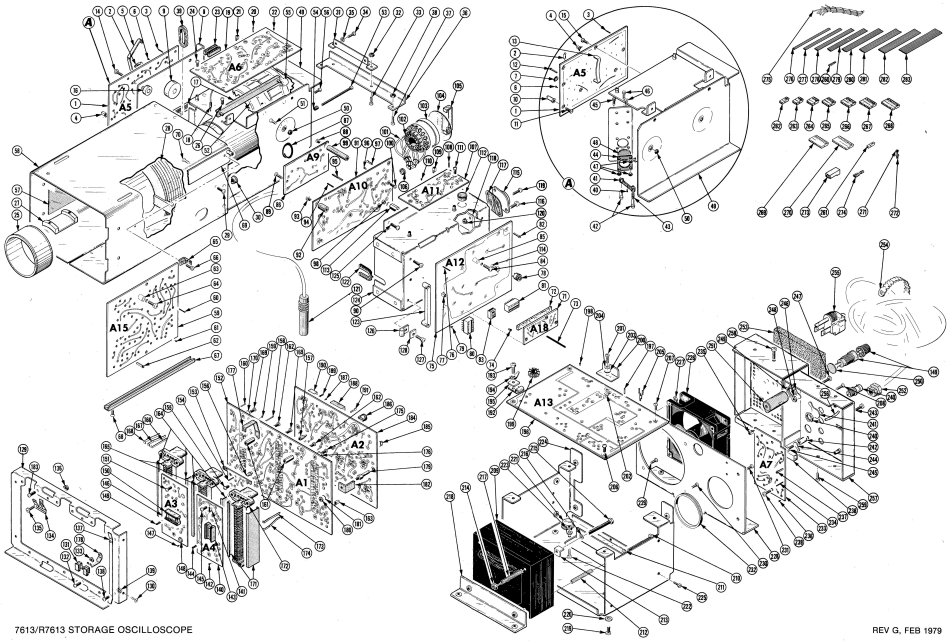
A1
A2
A3
A4
A5
A6
A7
A9
A10
A11
A12
A13
A15
A18

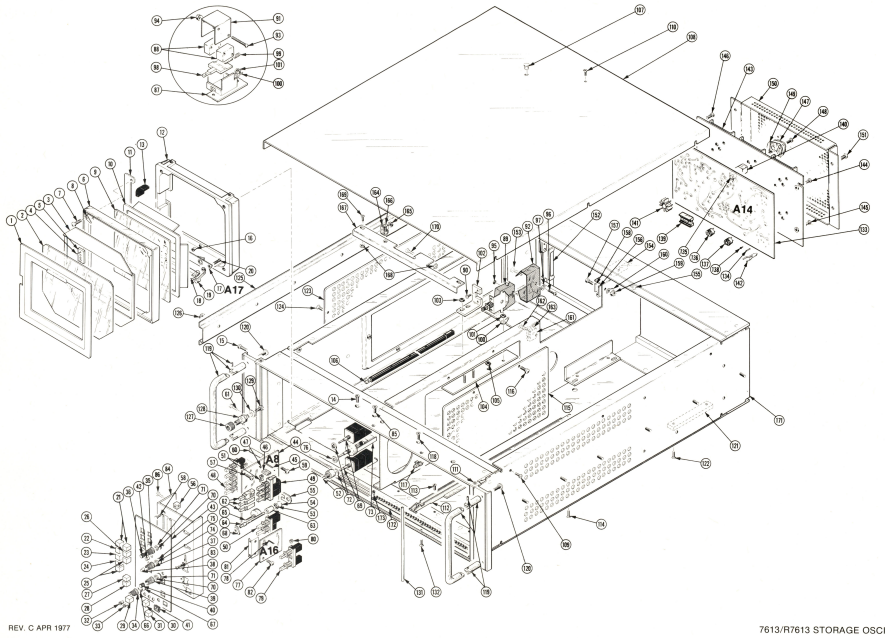
A17
A8
A16
A14

Fig. & Index No.	Tektronix Part No.	Serial/Model No. Eff	Dscont	Qty	1 2 3 4 5	Name & Description	Mfr Code	Mfr Part Number
4-1	----- -----			1		CKT BOARD ASSY:VERTICAL AMPLIFIER		
-2	131-0566-00	B010100	B149999	1		. LINK,TERM.CONNE:0.086 DIA X 2.375 INCH L	55210	L-2007-1
	131-0566-00	B150000		4		. LINK,TERM.CONNE:0.086 DIA X 2.375 INCH L	55210	L-2007-1
-3	131-0608-00	B010100	B149999	7		. TERMINAL,PIN:0.365 L X 0.25 PH,BRZ,GOLD PL	22526	47357
	131-0608-00	B150000		8		. TERMINAL,PIN:0.365 L X 0.25 PH,BRZ,GOLD PL	22526	47357
-4	131-1003-00			3		. CONNECTOR BODY,:CKT BD MT,2 PRONG	80009	131-1003-00
-5	131-1303-00	B010100	B149999X	1		. CONTACT,ELEC:IC GROUND	80009	131-1303-00
-6	136-0252-04	B010100	B151109	9		. SOCKET,PIN TERM:0.188 INCH LONG	22526	75060-007
	136-0252-04	B151110	B161209	36		. SOCKET,PIN TERM:0.188 INCH LONG	22526	75060-007
-7	136-0350-00	B161210	B365168	12		. SOCKET,PLUG-IN:3 PIN,LOW PROFILE	80009	136-0350-00
	136-0350-00	B365169		3		. SOCKET,PLUG-IN:3 PIN,LOW PROFILE	80009	136-0350-00
	136-0252-04	B365169		27		. SOCKET,PIN TERM:0.188 INCH LONG	22526	75060-007
-8	214-1652-00	B010100	B149999X	1		. HEAT SINK,ELEC:VERT CKT BOARD,AL	80009	214-1652-00
-9	214-1757-00	B010100	B149999X	1		. HEAT SINK,ELEC:1.0 DIA X 0.27 THICK	80009	214-1757-00
-10	131-0775-00	XB150000		2		. CONTACT,ELEC:HEX,0.25 INCH W/6-32 1 END	88245	1601-A
						(ATTACHING PARTS FOR EACH)		
-11	211-0503-00	XB150000		1		. SCREW,MACHINE:6-32 X 0.188 INCH,PNH STL	83385	OBD
						- - - * - - -		
-12	214-0579-00	XB150000		2		. TERM.,TEST PT:BRS CD PL	80009	214-0579-00
-13	346-0117-00	XB150000		1		. STRAP,GROUND:	80009	346-0117-00
						(ATTACHING PARTS FOR CKT BD)		
-14	211-0014-00	B010100	B149999X	2		SCREW,MACHINE:4-40 X 0.50 INCH,PNH STL	83385	OBD
-15	211-0008-00	B010100	B149999	1		SCREW,MACHINE:4-40 X 0.25 INCH,PNH STL	83385	OBD
	211-0008-00	B150000		3		SCREW,MACHINE:4-40 X 0.25 INCH,PNH STL	83385	OBD
						- - - * - - -		
-16	361-0477-00	B010100	B149999X	2		SPACER,SLEEVE:0.25 L X 0.238 ID	80009	361-0477-00
-17	351-0087-00	B010100	B149999	2		GUIDE,CKT CARD:4.75 INCH LONG,PLASTIC	80009	351-0087-00
	351-0087-00	B150000		1		GUIDE,CKT CARD:4.75 INCH LONG,PLASTIC	80009	351-0087-00
-18	131-0472-01			4		CONTACT,ELEC:FEMALE	80009	131-0472-01
-19	----- -----			1		CKT BOARD ASSY:HORIZONTAL AMPLIFIER(SEE A6 EPL)		
-20	131-0608-00			17		. TERMINAL,PIN:0.365 L X 0.25 PH,BRZ,GOLD PL	22526	47357
-21	131-1003-00			2		. CONNECTOR BODY,:CKT BD MT,2 PRONG	80009	131-1003-00
-22	136-0252-04			25		. SOCKET,PIN TERM:0.188 INCH LONG	22526	75060-007
	136-0252-01			2		. CONTACT,ELEC:0.178 INCH LONG	00779	1-332095-2
	129-0075-00	XB020000	B069999X	1		. INSULATOR,STDF:0.312 OD X 0.128 OD X 0.765	80009	129-0075-00
	361-0007-00	XB020000	B069999X	1		. SPACER,SLEEVE:0.250 INCH DIA,PLASTIC	80009	361-0007-00
-23	136-0260-02			1		. SOCKET,PLUG-IN:16 CONTACT,LOW CLEARANCE	82647	C9316-18
						(ATTACHING PARTS FOR CKT BD)		
-24	211-0008-00			2		SCREW,MACHINE:4-40 X 0.25 INCH,PNH STL	83385	OBD
						- - - * - - -		
-25	----- -----			1		COIL:Y-AXIS(SEE L198 EPL)		
						(ATTACHING PARTS)		
-26	213-0138-00			2		SCR,TPG,THD FOR:4-40 X 0.188 INCH,PNH STL	83385	OBD
						- - - * - - -		
-27	343-0217-00			1		CLAMP,COIL:Y-AXIS	80009	343-0217-00
-28	119-0368-00			1		DELAY LINE,ELEC:	80009	119-0368-00
						(ATTACHING PARTS)		
-29	213-0034-00			2		SCR,TPG,THD CTG:4-40 X 0.188 INCH,PNH STL	83385	OBD
						- - - * - - -		
-30	348-0064-00			1		GROMMET,PLASTIC:0.625 INCH DIA	80009	348-0064-00
-31	386-2411-00			1		SUPPORT,CRT:	80009	386-2411-00
						(ATTACHING PARTS)		
-32	210-0457-00			2		NUT,PLAIN,EXT W:6-32 X 0.312 INCH,STL	83385	OBD
-33	211-0559-00			2		SCREW,MACHINE:6-32 X 0.375"100 DEG,FLH STL	83385	OBD
-34	211-0510-00			2		SCREW,MACHINE:6-32 X 0.375 INCH,PNH STL	83385	OBD
-35	210-0993-00			2		WSHR,SHOULDERED:0.143" ID X 0.75" OD,BRS	86928	OBD
						- - - * - - -		
-36	407-1186-00			1		BRACKET,CRT:ALUMINUM	80009	407-1186-00
						(ATTACHING PARTS)		
-37	211-0510-00			2		SCREW,MACHINE:6-32 X 0.375 INCH,PNH STL	83385	OBD
-38	210-0457-00			3		NUT,PLAIN,EXT W:6-32 X 0.312 INCH,STL	83385	OBD
						- - - * - - -		

Fig. & Index No.	Tektronix Part No.	Serial/Model No. Eff	Dscont	Qty	1 2 3 4 5	Name & Description	Mfr Code	Mfr Part Number
4-39	255-0334-00			FT		PLASTIC CHANNEL:12.75 X 0.175X 0.155,NYL	11897	122-37-2500
						(ATTACHING PARTS)		
-40	210-0627-00	XB150000		2		RIVET,SOLID:0.042 DIA X 0.25 INCH,RDH	80009	210-0627-00
						- - - * - - -		
-41	343-0097-00	XB150000		2		RTNR,TRANSISTOR:HEAT SINK	80009	343-0097-00
						(ATTACHING PARTS FOR EACH)		
-42	210-0599-00	XB150000		2		NUT,SLEEVE:4-40 X 0.391 INCH LONG	80009	210-0599-00
-43	214-0368-00	XB150000		1		SPRING,HLCPS:0.24 DIA X 0.438 INCH LONG	80009	214-0368-00
						- - - * - - -		
-44	352-0062-00	XB150000		2		HOLDER,HEAT SK:1.187 X 1.187 INCHES,PLSTC	80009	352-0062-00
						(ATTACHING PARTS FOR EACH)		
-45	211-0008-00	XB150000		2		SCREW,MACHINE:4-40 X 0.25 INCH,PNH STL	83385	OBD
-46	211-0012-00	XB150000		2		SCREW,MACHINE:4-40 X 0.375 INCH,PNH STL	83385	OBD
-47	210-0406-00	XB150000		4		NUT,PLAIN,HEX.:4-40 X 0.188 INCH,BRS	73743	2X12161-402
						- - - * - - -		
-48	214-1138-00	XB150000		2		HEAT SINK,ELEC:TRANSISTOR,1 INCH OD,AL	80009	214-1138-00
-49	441-1124-00	B010100	B149999	1		CHAS ASSY,SCOPE:	80009	441-1124-00
	441-1192-00	B150000		1		CHASSIS,SCOPE:	80009	441-1192-00
						(ATTACHING PARTS)		
-50	210-0457-00			2		NUT,PLAIN,EXT W:6-32 X 0.312 INCH,STL	83385	OBD
-51	211-0590-00			2		SCREW,MACHINE:6-32 X 0.25 INCH,PNH STL	83385	OBD
						- - - * - - -		
	----- -----			-		. CHASSIS INCLUDES:		
-52	343-0205-01			1		. RTNR,ELCTRN TU:3.0 DIA X 1.5L,DELRIN	80009	343-0205-01
						(ATTACHING PARTS)		
-53	211-0170-00			2		. SCREW,MACHINE:4-40 X 2.75 INCH,PNH STL	83385	OBD
-54	214-1333-00			2		. SPRING,HLCPS:0.213 OD X 0.375 INCH LONG	80009	214-1333-00
						- - - * - - -		
-55	354-0347-00			1		. RING,CRT CLAMP:	80009	354-0347-00
						(ATTACHING PARTS)		
-56	211-0507-00			4		. SCREW,MACHINE:6-32 X 0.312 INCH,PNH STL	83385	OBD
						- - - * - - -		
-57	342-0182-00			1		INSULATOR,FILM:	80009	342-0182-00
-58	337-1531-00			1		SHIELD SECT,CRT:	80009	337-1531-00
-59	----- -----			1		CKT BOARD ASSY:STORAGE(SEE A15 EPL)		
-60	131-0608-00			52		. TERMINAL,PIN:0.365 L X 0.25 PH,BRZ,GOLD PL	22526	47357
-61	136-0252-04			111		. SOCKET,PIN TERM:0.188 INCH LONG	22526	75060-007
-62	214-0579-00			6		. TERM.,TEST PT:BRS CD PL	80009	214-0579-00
						(ATTACHING PARTS FOR CKT BD)		
-63	361-0527-00			1		SPACER,CKT CARD:0.188 OD X 0.13 INCH LONG	80009	361-0527-00
-64	211-0034-00			1		SCREW,MACHINE:2-56 X 0.50 INCH,PNH	83385	OBD
						- - - * - - -		
-65	344-0133-00			2		CLIP,SPR,TNSN:CIRCUIT CARD MOUNTING	80009	344-0133-00
						(ATTACHING PARTS FOR EACH)		
-66	213-0088-00			1		SCR,TPG,THD CTG:4-24 X 0.25 INCH,PNH STL	83385	OBD
						- - - * - - -		
-67	351-0179-00			1		GUIDE,CKT CARD:6.75 INCH LONG,PLASTIC	80009	351-0179-00
						(ATTACHING PARTS)		
-68	211-0101-00			2		SCREW,MACHINE:4-40 X 0.25" 100 DEG,FLH STL	83385	OBD
						- - - * - - -		
-69	441-1048-00			1		CHASSIS SCOPE:LOGIC	80009	441-1048-00
						(ATTACHING PARTS)		
-70	211-0147-00			2		SCREW,MACHINE:4-40 X 0.25 INCH,PNH STL	83385	OBD
						- - - * - - -		
	672-0572-00	XB300000		1		CKT BOARD ASSY:PROTECTION AND READOUT	80009	672-0572-00
-71	----- -----	XB300000		1		. CKT BOARD ASSY:PROTECTION(SEE A18 EPL)		
-72	253-0162-00	XB300000	B365099	FT		. . TAPE,PRESS,SENS:0.062 THK X 0.125 WIDE	04963	4116
	253-0160-00	B365100		1		. . TAPE,PRESS.SENS:ADHESIVE,2.124 FT LONG	04963	4116 TYPE A
-73	131-0589-00	XB300000		20		. . TERM,PIN:0.46 L X 0.025 SQ.PH BRZ GL	22526	47350
-74	210-0702-00	XB030000		2		. . EYELET,METALLIC:0.047 OD X 0.125 INCH LONG	07707	S6127
-75	----- -----			1		. CKT BOARD ASSY:READOUT(SEE A12 EPL)		
-76	131-0608-00			42		. . TERMINAL,PIN:0.365 L X 0.25 PH,BRZ,GOLD PL	22526	47357
-77	131-1003-00			6		. . CONNECTOR BODY,:CKT BD MT,2 PRONG	80009	131-1003-00

Fig. & Index No.	Tektronix Part No.	Serial/Model No. Eff	Dscont	Qty	1 2 3 4 5 Name & Description	Mfr Code	Mfr Part Number
4-78	136-0235-00			1	. . SOCKET,PLUG-IN:6 CONTACT,ROUND	71785	133-96-12-062
-79	136-0252-04			42	. . SOCKET,PIN TERM:0.188 INCH LONG	22526	75060-007
	136-0252-01			14	. . CONTACT,ELEC:0.178 INCH LONG	00779	1-332095-2
-80	136-0260-01			14	. . SOCKET,PLUG-IN:16 CONTACT,RECT SHAPE	71785	133-51-02-075
-81	136-0269-00			3	. . SOCKET,PLUG-IN:14 CONTACT,LOW CLEARANCE	73803	CS9002-14
-82	214-0579-00	B010100	B299999	21	. . TERM.,TEST PT:BRS CD PL	80009	214-0579-00
	214-0579-00	B300000		20	. . TERM.,TEST PT:BRS CD PL	80009	214-0579-00
-83	260-0723-00			1	. . SWITCH,SLIDE:DPDT,0.5A,125VAC	79727	GF126-0028
					(ATTACHING PARTS FOR CKT BD)		
-84	211-0205-00			1	. SCREW MACHINE:RDH SST	80009	211-0205-00
-85	361-0527-00			1	. SPACER,CKT CARD:0.188 OD X 0.13 INCH LONG	80009	361-0527-00
					- - - * - - -		
	621-0466-01	B010100	B359999	1	POWER SUPPLY:HIGH VOLTAGE	80009	621-0466-01
	621-0466-02	B360000		1	POWER SUPPLY:	80009	621-0466-02
-86	----- -----	B010100	B359999X	1	. CKT BOARD ASSY:HIGH VOLTAGE #2(SEE A9 EPL)		
-87	346-0032-00	B010100	B029999	2	. . STRAP,RETAINING:0.075 DIA X 4.0 L,MLD RBR	98159	2859-75-4
	253-0011-00	B030000	B359999X	FT	. . LACING,ELEC,CAB:10 INCH LONG	17516	OBD
					(ATTACHING PARTS FOR CKT BD)		
-88	211-0040-00	B010100	B359999X	2	. SCREW,MACHINE:4-40 X 0.25",BDGH PLSTC	26365	OBD
-89	211-0008-00	B010100	B359999X	2	. SCREW,MACHINE:4-40 X 0.25 INCH,PNH STL	83385	OBD
					- - - * - - -		
	672-0727-00	XB360000		1	. CKT BOARD ASSY:HIGH VOLTAGE	80009	672-0727-00
					(ATTACHING PARTS)		
-90	211-0008-00			4	. SCREW,MACHINE:4-40 X 0.25 INCH,PNH STL	83385	OBD
					- - - * - - -		
	----- -----			-	. . CKT BOARD ASSY INCLUDES:		
-91	----- -----			1	. . CKT BOARD ASSY:HIGH VOLTAGE #1(SEE A10 EPL)		
-92	129-0143-00	B010100	B359999X	3	. . . INSULATOR,STDF:0.312 OD X 0.406" L,NYLON	80009	129-0143-00
	129-0143-00	B360000		4	. . . INSULATOR,STDF:0.312 OD X 0.406" L,NYLON	80009	129-0143-00
					(ATTACHING PARTS FOR EACH)		
-93	211-0008-00	B010100	B359999	1	. . . SCREW,MACHINE:4-40 X 0.25 INCH,PNH STL	83385	OBD
	211-0040-00	B360000		1	. . . SCREW,MACHINE:4-40 X 0.25",BDGH PLSTC	26365	OBD
					- - - * - - -		
-94	131-0589-00	B010100	B359999	5	. . . TERM,PIN:0.46 L X 0.025 SQ.PH BRZ GL	22526	47350
	131-0589-00	B360000		6	. . . TERM,PIN:0.46 L X 0.025 SQ.PH BRZ GL	22526	47350
-95	131-0608-00	B010100	B359999	21	. . . TERMINAL,PIN:0.365 L X 0.25 PH,BRZ,GOLD PL	22526	47357
	131-0608-00	B360000		15	. . . TERMINAL,PIN:0.365 L X 0.25 PH,BRZ,GOLD PL	22526	47357
-96	136-0252-04			9	. . . SOCKET,PIN TERM:0.188 INCH LONG	22526	75060-007
-97	214-0579-00			1	. . . TERM.,TEST PT:BRS CD PL	80009	214-0579-00
-98	166-0292-00	B010100	B359999X	2	. . . SPACER,SLEEVE:PLSTC,0.155 DIA X 0.065"L	80009	166-0292-00
-99	129-0251-00	B010100	B359999X	4	. . . INSULATOR,STDF:0.250 OD X 1.125" L,PLSTC	80009	129-0251-00
	129-0251-00	B360000		3	. . . INSULATOR,STDF:0.250 OD X 1.125" L,PLSTC	80009	129-0251-00
					(ATTACHING PARTS FOR EACH)		
-100	211-0008-00	B010100	B359999	1	. . . SCREW,MACHINE:4-40 X 0.25 INCH,PNH STL	83385	OBD
	211-0040-00	B360000		1	. . . SCREW,MACHINE:4-40 X 0.25",BDGH PLSTC	26365	OBD
					- - - * - - -		
	131-0566-00	XB360000		2	. . . LINK,TERM.CONNE:0.086 DIA X 2.375 INCH L	55210	L-2007-1
	124-0162-00	XB360000		1	. . . TERMINAL BOARD:4 NOTCH,CERAMIC,STUD MTD	80009	124-0162-00
	361-0007-00	XB360000		1	. . . SPACER,SLEEVE:0.250 INCH DIA,PLASTIC	80009	361-0007-00
	----- -----	XB360000		1	. . CKT BOARD ASSY:FOCUS DC RESTR(SEE A19 EPL)		
	131-1261-00	XB360000		4	. . . CONTACT,ELEC:F-SHAPED	00779	1-380953-0
	----- -----	XB360000		1	. . CKT BOARD ASSY:Z AXIS DC RESTR(SEE A20 EPL)		
	131-1261-00	XB360000		4	. . . .CONTACT,ELEC:F-SHAPED	00779	1-380953-0
-101	136-0506-00	B010100	B359999	1	. SKT,PL-IN ELEK:ELCTRN TUBE,14 CONT W/LEADS	80009	136-0506-00
	136-0589-03	B360000		1	. SKT,PL-IN ELEK:ELCTRN TUBE,14 CONT W/LEADS	80009	136-0589-03
-102	136-0304-02			1	. . SOCKET,PLUG-IN:CRT,14 PIN SOCKET,W/PINS	80009	136-0304-02
-103	200-0917-01			1	. . COV,ELECTRON TU:2.052 OD X 0.291" THK,PLSTC	80009	200-0917-01
-104	367-0117-00			1	. . PULL,SOCKET:	80009	367-0117-00
-105	343-0235-00	B010100	B359999	1	. . CLAMP,CRT SKT:DELRIN	80009	343-0235-00
	343-0254-00	B360000		1	. . CLP,ELCTRN TUBE:	80009	343-0254-00
-106	348-0012-00	XB360000		1	. . GROMMET,RUBBER:0.625 INCH DIA	72653	1043-1M
	352-0201-00			1	. . CONN BODY,PL,EL:5 WIRE BLACK	80009	352-0201-00

Fig. & Index No.	Tektronix Part No.	Serial/Model No. Eff	Dscont	Qty	1 2 3 4 5	Name & Description	Mfr Code	Mfr Part Number
4-	352-0202-01	XB360000		1		. . CONN BODY,PL,EL:6 WIRE BROWN	80009	352-0202-01
	175-0827-00			FT		. . WIRE,ELECTRICAL:4 WIRE RIBBON	08261	SS-0426-710610C
-107	----- -----			1		. CKT BOARD ASSY:Z AXIS(SEE A11 EPL)		
-108	131-0608-00			36		. . TERMINAL,PIN:0.365 L X 0.25 PH,BRZ,GOLD PL	22526	47357
-109	131-1003-00			1		. . CONNECTOR BODY,:CKT BD MT,2 PRONG	80009	131-1003-00
-110	136-0252-01			1		. . CONTACT,ELEC:0.178 INCH LONG	00779	1-332095-2
	136-0252-04			35		. . SOCKET,PIN TERM:0.188 INCH LONG	22526	75060-007
						(ATTACHING PARTS FOR CKT BD)		
-111	211-0008-00			3		. SCREW,MACHINE:4-40 X 0.25 INCH,PNH STL	83385	OBD
						- - - * - - -		
-112	348-0063-00			1		. GROMMET,PLASTIC:0.50 INCH DIA	80009	348-0063-00
-113	129-0236-00	B010100	B359999X	1		. SPACER,POST:0.188 HEX X 0.375 INCH LONG	06540	9726-A-0440
						(ATTACHING PARTS)		
-114	211-0008-00	B010100	B359999X	1		. SCREW,MACHINE:4-40 X 0.25 INCH,PNH STL	83385	OBD
						- - - * - - -		
-115	----- -----	B010100	B359999	2		. TRANSISTOR:(SEE Q1216,Q1218 EPL)		
	----- -----	B360000		1		. TRANSISTOR:(SEE Q1218 EPL)		
						(ATTACHING PARTS)		
-116	213-0146-00	B010100	B359999	4		. SCR,TPG,THD FOR:6-20 X 0.313 INCH,PNH STL	83385	OBD
	213-0146-00	B360000		2		. SCR,TPG,THD FOR:6-20 X 0.313 INCH,PNH STL	83385	OBD
-117	386-0978-00	B010100	B359999	2		. INSULATOR,PLATE:TRANSISTOR,MICA	80009	386-0978-00
	386-0978-00	B360000		1		. INSULATOR,PLATE:TRANSISTOR,MICA	80009	386-0978-00
						- - - * - - -		
-118	136-0280-00	B010100	B359999	2		. SOCKET,PLUG-IN:FOR TO-3 FOR TO-3	97913	LST 2202-2
	136-0280-00	B360000		1		. SOCKET,PLUG-IN:FOR TO-3 FOR TO-3	97913	LST 2202-2
						(ATTACHING PARTS)		
-119	211-0101-00	B010100	B359999	4		. SCREW,MACHINE:4-40 X 0.25" 100 DEG,FLH STL	83385	OBD
	211-0101-00	B360000		2		. SCREW,MACHINE:4-40 X 0.25" 100 DEG,FLH STL	83385	OBD
-120	210-0586-00	B010100	B359999	4		. NUT,PLAIN,EXT W:4-40 X 0.25 INCH,STL	78189	211-041800-00
	210-0586-00	B360000		2		. NUT,PLAIN,EXT W:4-40 X 0.25 INCH,STL	78189	211-041800-00
						- - - * - - -		
	343-0144-00	XB360000		1		. CLAMP,LOOP:0.125 INCH ID,BLK NYLON	95987	1-8-2
						(ATTACHING PARTS)		
	211-0101-00	XB360000		1		. SCREW,MACHINE:4-40 X 0.25" 100 DEG,FLH STL	83385	OBD
	210-0586-00	XB360000		1		. NUT,PLAIN,EXT W:4-40 X 0.25 INCH,STL	78189	211-041800-00
						- - - * - - -		
	214-2736-00	XB360000		1		. PLUG,HOLE:0.312 DIA,PLASTIC	28520	DP-312
	175-2132-00	XB360000		1		. CA ASSY,SP,ELEC:3,24 AWG,5.0 L	80009	175-2132-00
	129-0722-00	XB360000		1		. SPACER,POST:0.656 LONG,PLASTIC	80009	129-0722-00
-121	131-0773-00	B010100	B359999X	1		. LEAD,ELECTRICAL:18.0 INCH LONG	01009	8111LFD
	255-0334-00	B010100	B029999	FT		. PLASTIC CHANNEL:12.75 X 0.175X 0.155,NYL	11897	122-37-2500
	255-0334-00	B030000	B051189	FT		. PLASTIC CHANNEL:12.75 X 0.175X 0.155,NYL	11897	122-37-2500
	348-0012-00	B030000	B359999X	1		. GROMMET,RUBBER:0.625 INCH DIA	72653	1043-1M
-122	348-0085-00	B051190	B292407	1		. GROMMET,PLASTIC:U-SHAPED	80009	348-0085-00
	358-0166-00	B292408	B359999X	1		. GROMMET,PLASTIC:BLACK	80009	358-0166-00
-123	351-0324-00			2		. GUIDE,CKT BD:3.023 LONG,DELRIN	80009	351-0324-00
-124	337-1538-01	B010100	B359999	1		. SHIELD,ELEC:HIGH VOLTAGE	80009	337-1538-01
	337-1538-02	B360000		1		. SHIELD,ELEC:HIGH VOLTAGE	80009	337-1538-02
						(ATTACHING PARTS)		
-125	211-0504-00			3		. SCREW,MACHINE:6-32 X 0.25 INCH,PNH STL	83385	OBD
						- - - * - - -		
-126	343-0002-00			1		CLAMP,LOOP:0.188 INCH DIA	95987	3-16-6B
						(ATTACHING PARTS)		
-127	211-0503-00			1		SCREW,MACHINE:6-32 X 0.188 INCH,PNH STL	83385	OBD
-128	210-0813-00			1		WSHR,SHOULDERED:# 10 FIBER	74921	OBD
						- - - * - - -		
-129	407-0973-00			1		BRACKET,CONN:ALUMINUM	80009	407-0973-00
						(ATTACHING PARTS)		
-130	211-0504-00			2		SCREW,MACHINE:6-32 X 0.25 INCH,PNH STL	83385	OBD
						- - - * - - -		
-131	131-0930-00			2		CONTACT,ELEC:PLUG-IN GROUND	80009	131-0930-00
						(ATTACHING PARTS FOR EACH)		
-132	211-0008-00			1		SCREW,MACHINE:4-40 X 0.25 INCH,PNH STL	83385	OBD
-133	210-0586-00			1		NUT,PLAIN,EXT W:4-40 X 0.25 INCH,STL	78189	211-041800-00
						- - - * - - -		

Fig. & Index No.	Tektronix Part No.	Serial/Model No. Eff	Dscont	Qty	1 2 3 4 5	Name & Description	Mfr Code	Mfr Part Number
4-134	131-0799-00			2		CONTACT,ELEC:PLUG-IN GROUND	80009	131-0799-00
						(ATTACHING PARTS FOR EACH)		
-135	211-0008-00			1		SCREW,MACHINE:4-40 X 0.25 INCH,PNH STL	83385	OBD
-136	210-0586-00			1		NUT,PLAIN,EXT W:4-40 X 0.25 INCH,STL	78189	211-041800-00
						- - - * - - -		
-137	131-0800-00			2		CONTACT,ELEC:PLUG-IN GROUND	80009	131-0800-00
						(ATTACHING PARTS FOR EACH)		
-138	211-0008-00			2		SCREW,MACHINE:4-40 X 0.25 INCH,PNH STL	83385	OBD
-139	210-0586-00			2		NUT,PLAIN,EXT W:4-40 X 0.25 INCH,STL	78189	211-041800-00
						- - - * - - -		
-140	----- -----			1		CKT BOARD ASSY:TRIGGER SELECTOR(SEE A4 EPL)		
-141	131-0589-00			4		. TERM,PIN:0.46 L X 0.025 SQ.PH BRZ GL	22526	47350
-142	136-0252-04	B010100	B161209	15		. SOCKET,PIN TERM:0.188 INCH LONG	22526	75060-007
	136-0350-00	B161210	B365764	5		. SOCKET,PLUG-IN:3 PIN,LOW PROFILE	80009	136-0350-00
	136-0252-04	B365765		15		. SOCKET,PIN TERM:0.188 INCH LONG	22526	75060-007
-143	136-0260-02			1		. SOCKET,PLUG-IN:16 CONTACT,LOW CLEARANCE	82647	C9316-18
-144	136-0263-03			16		. SOCKET,PIN TERM:FOR 0.025 INCH SQUARE PIN	00779	86250-2
						(ATTACHING PARTS FOR CKT BD)		
-145	211-0008-00			2		SCREW,MACHINE:4-40 X 0.25 INCH,PNH STL	83385	OBD
						- - - * - - -		
-146	----- -----			1		CKT BOARD ASSY:VERTICAL INTERFACE(SEE A3 EPL)		
-147	136-0252-04	B010100	B151109	15		. SOCKET,PIN TERM:0.188 INCH LONG	22526	75060-007
	136-0252-04	B151110	B161209	31		. SOCKET,PIN TERM:0.188 INCH LONG	22526	75060-007
	136-0252-04	B161210	B365764	22		. SOCKET,PIN TERM:0.188 INCH LONG	22526	75060-007
	136-0252-04	B365765		31		. SOCKET,PIN TERM:0.188 INCH LONG	22526	75060-007
-148	136-0350-00	B161210	B365764X	3		. SOCKET,PLUG-IN:3 PIN,LOW PROFILE	80009	136-0350-00
-149	136-0263-03			18		. SOCKET,PIN TERM:FOR 0.025 INCH SQUARE PIN	00779	86250-2
-150	136-0260-01			1		. SOCKET,PLUG-IN:16 CONTACT,RECT SHAPE	71785	133-51-02-075
						(ATTACHING PARTS)		
-151	211-0008-00			2		SCREW,MACHINE:4-40 X 0.25 INCH,PNH STL	83385	OBD
						- - - * - - -		
-152	----- -----			1		CKT BOARD ASSY:MAIN INTERFACE(SEE A1 EPL)		
-153	----- -----			1		. CKT BOARD ASSY:VERTICAL INTCON(SEE A1 EPL)		
-154	131-0787-00			8		. . CONTACT,ELEC:0.64 INCH LONG	22526	47359
						(ATTACHING PARTS FOR CKT BD)		
-155	211-0008-00			2		. SCREW,MACHINE:4-40 X 0.25 INCH,PNH STL	83385	OBD
						- - - * - - -		
-156	351-0213-00			2		. GUIDE-POST,LOCK:0.285 INCH LONG	80009	351-0213-00
-157	386-1558-00			2		. SPACER,CKT BD:0.335 H,ACETAL	80009	386-1558-00
	131-0591-00			32		. CONTACT,ELEC:0.835 INCH LONG	22526	47352
-158	131-0592-00			26		. CONTACT,ELEC:0.885 INCH LONG	22526	47353
-159	136-0252-04	XB251860		2		. SOCKET,PIN TERM:0.188 INCH LONG	22526	75060-007
-160	131-0608-00			85		. TERMINAL,PIN:0.365 L X 0.25 PH,BRZ,GOLD PL	22526	47357
-161	129-0308-00			4		. POST,ELEC-MECH:HEX.,0.25 X 0.465 INCH LONG	80009	129-0308-00
						(ATTACHING PARTS FOR EACH)		
-162	211-0008-00			1		. SCREW,MACHINE:4-40 X 0.25 INCH,PNH STL	83385	OBD
						- - - * - - -		
-163	131-1003-00			2		. CONNECTOR BODY,:CKT BD MT,2 PRONG	80009	131-1003-00
	131-0767-02	B010100	B039999	2		. CONNECTOR,RCPT,:76 CONTACT	80009	131-0767-02
	131-0767-08	B040000		2		. CONNECTOR,RCPT,:PLUG-IN CKT BD,70 CONTACT	80009	131-0767-08
-164	200-0950-00			2		. . COVER,ELEC CONN:PLASTIC	80009	200-0950-00
-165	204-0365-00	B010100	B354199	2		. . BODY,CONNECTOR:PLUG-IN CIRCUIT CARD	80009	204-0365-00
	204-0365-02	B354200		2		. . BODY,CONNECTOR:PLUG-IN CIRCUIT CARD	80009	204-0365-02
-166	131-0726-00	B010100	B039999	38		. . CONTACT,ELEC:STRAIGHT	80009	131-0726-00
	131-0726-00	B040000		35		. . CONTACT,ELEC:STRAIGHT	80009	131-0726-00
-167	131-0727-00	B010100	B039999	38		. . CONTACT,ELEC:OFFSET	80009	131-0727-00
	131-0727-00	B040000		35		. . CONTACT,ELEC:OFFSET	80009	131-0727-00
-168	131-0899-00			4		. . CONTACT,ELEC:0.048 X 0.006 INCH THK	80009	131-0899-00
						(ATTACHING PARTS FOR EACH)		
-169	213-0232-00			2		. SCR,TPG,THD FOR:2-32 X 0.312 INCH,PNH STL	83385	OBD
-170	210-0906-00			1		. WASHER,NONMETAL:FIBER,0.125 ID X 0.203"OD	86928	OBD
						- - - * - - -		
	131-0767-00	B010100	B039999	1		. CONNECTOR,RCPT,:76 CONTACT	80009	131-0767-00
	131-0767-07	B040000		1		. CONNECTOR,RCPT,:PLUG-IN CKT BD,70 CONTACT	80009	131-0767-07

Fig. & Index No.	Tektronix Part No.	Serial/Model No. Eff	Dscont	Qty	1 2 3 4 5	Name & Description	Mfr Code	Mfr Part Number
4-171	200-0950-00			2		. . COVER,ELEC CONN:PLASTIC	80009	200-0950-00
-172	204-0365-02			1		. . BODY,CONNECTOR:PLUG-IN CIRCUIT CARD	80009	204-0365-02
-173	131-0726-00	B010100	B039999	38		. . CONTACT,ELEC:STRAIGHT	80009	131-0726-00
	131-0726-00	B040000		35		. . CONTACT,ELEC:STRAIGHT	80009	131-0726-00
-174	131-0727-00	B010100	B039999	38		. . CONTACT,ELEC:OFFSET	80009	131-0727-00
	131-0727-00	B040000		35		. . CONTACT,ELEC:OFFSET	80009	131-0727-00
						(ATTACHING PARTS)		
-175	213-0232-00			2		. SCR,TPG,THD FOR:2-32 X 0.312 INCH,PNH STL	83385	OBD
-176	210-0906-00			1		. WASHER,NONMETAL:FIBER,0.125 ID X 0.203"OD	86928	OBD
						- - - * - - -		
-177	131-0804-00			1		. LINK,TERM.CONNE:J-SHAPE	80009	131-0804-00
-178	131-0805-00			2		. LINK,TERM.CONNE:J-SHAPE,0.90X0.82 X 0.312"	80009	131-0805-00
-179	214-1568-00			2		. PIN,GUIDE:	80009	214-1568-00
						(ATTACHING PARTS FOR EACH)		
-180	210-0406-00			1		. NUT,PLAIN,HEX.:4-40 X 0.188 INCH,BRS	73743	2X12161-402
-181	210-0054-00			1		. WASHER,LOCK:SPLIT,0.118 ID X 0.212"OD STL	83385	OBD
						- - - * - - -		
-182	344-0147-00			2		. CLIP,SPR,TNSN:CIRCUIT CARD MOUNTING	80009	344-0147-00
						(ATTACHING PARTS FOR CKT BD)		
-183	213-0034-00	B010100	B354199	9		SCR,TPG,THD CTG:4-40 X 0.188 INCH,PNH STL	83385	OBD
	213-0263-00	B354200		9		SCREW,TPG,TF:4-24 X 0.375 INCH,PNH STL	83385	OBD
						- - - * - - -		
-184	----- -----			1		CKT BOARD ASSY:LOGIC(SEE A2 EPL)		
-185	131-0566-00			1		. LINK,TERM.CONNE:0.086 DIA X 2.375 INCH L	55210	L-2007-1
-186	136-0235-00			1		. SOCKET,PLUG-IN:6 CONTACT,ROUND	71785	133-96-12-062
-187	136-0252-04	B010100	B161209	24		. SOCKET,PIN TERM:0.188 INCH LONG	22526	75060-007
	136-0350-00	B161210	B365764	8		. SOCKET,PLUG-IN:3 PIN,LOW PROFILE	80009	136-0350-00
	136-0252-04	B365765		24		. SOCKET,PIN TERM:0.188 INCH LONG	22526	75060-007
-188	136-0260-02			1		. SOCKET,PLUG-IN:16 CONTACT,LOW CLEARANCE	82647	C9316-18
-189	136-0263-03			33		. SOCKET,PIN TERM:FOR 0.025 INCH SQUARE PIN	00779	86250-2
-190	136-0269-02			3		. SOCKET,PLUG-IN:14 CONTACT,LOW CLEARANCE	01295	C95140
-191	214-0579-00			4		. TERM.,TEST PT:BRS CD PL	80009	214-0579-00
-192	343-0004-00			1		CLAMP,LOOP:0.312 INCH DIAMETER,PLSTC	95987	5-16-6B
						(ATTACHING PARTS)		
-193	211-0510-00			1		SCREW,MACHINE:6-32 X 0.375 INCH,PNH STL	83385	OBD
-194	210-0202-00			1		TERMINAL,LUG:0.146 ID,LOCKING,BRZ TINNED	78189	2104-06-00-2520N
-195	210-0863-00			1		WSHR,LOOP CLAMP:FOR 0.50" WIDE CLAMP,STL	95987	C191
						- - - * - - -		
-196	----- -----			1		CKT BOARD ASSY:RECTIFIER(SEE A13 EPL)		
-197	131-0608-00			28		. TERMINAL,PIN:0.365 L X 0.25 PH,BRZ,GOLD PL	22526	47357
-198	136-0252-04	B010100	B161209	6		. SOCKET,PIN TERM:0.188 INCH LONG	22526	75060-007
	136-0350-00	B161210	B365764	2		. SOCKET,PLUG-IN:3 PIN,LOW PROFILE	80009	136-0350-00
	136-0252-04	B365765		6		. SOCKET,PIN TERM:0.188 INCH LONG	22526	75060-007
-199	214-1292-00			2		. HEAT SINK,ELEC:TRANSISTOR	05820	205-AB
-200	214-1731-00	B010100	B050499	1		. HEAT SINK,ELEC:TRANSISTOR	80009	214-1731-00
	214-1731-01	B050500		1		. HEAT SINK,ELEC:TRANSISTOR	80009	214-1731-01
						(ATTACHING PARTS)		
-201	211-0014-00	B010100	B333238	1		. SCREW,MACHINE:4-40 X 0.50 INCH,PNH STL	83385	OBD
	211-0016-00	B333239		1		. SCREW,MACHINE:4-40 X 0.625 INCH,PNH STL	83385	OBD
-202	210-0586-00			1		. NUT,PLAIN,EXT W:4-40 X 0.25 INCH,STL	78189	211-041800-00
-203	210-0935-00			1		. WASHER,NONMETAL:FIBER,0.14 IDX 0.375"OD	74921	OBD
-204	210-0851-00	XB333239		1		. WASHER,FLAT:0.119 ID X 0.375 INCH OD,STL	12327	OBD
						- - - * - - -		
-205	344-0154-00			4		. CLIP,ELECTRICAL:FOR 0.25 INCH DIA FUSE	80009	344-0154-00
						(ATTACHING PARTS FOR CKT BD)		
-206	211-0507-00			2		SCREW,MACHINE:6-32 X 0.312 INCH,PNH STL	83385	OBD
-207	211-0511-00			1		SCREW,MACHINE:6-32 X 0.50 INCH,PNH STL	83385	OBD
-208	211-0008-00	XB050500		1		SCREW,MACHINE:4-40 X 0.25 INCH,PNH STL	83385	OBD
						- - - * - - -		
-209	----- -----			1		TRANSFORMER:(SEE T801 EPL)		
						(ATTACHING PARTS)		
-210	212-0522-00			2		SCREW,MACHINE:10-32 X 2.50",HEX HD STL	83385	OBD
-211	210-0812-00			2		WASHER,NONMETAL:#10,FIBER	86445	OBD
-212	166-0457-00			2		INSUL SLVG,ELEC:0.19 ID X 1.875"LONG MYLAR	80009	166-0457-00
						- - - * - - -		

Fig. & Index No.	Tektronix Part No.	Serial/Model No. Eff	Dscont	Qty	1 2 3 4 5	Name & Description	Mfr Code	Mfr Part Number
4-213	407-1837-00	XB333239		1		BRACKET,CKT BD:POLYCARBONATE	80009	407-1837-00
						(ATTACHING PARTS)		
-214	220-0410-00	XB333239		1		NUT,EXTENDED WA:10-32 X 0.375 INCH,STL	83385	OBD
-215	212-0522-00	XB333239		1		SCREW,MACHINE:10-32 X 2.50",HEX HD STL	83385	OBD
-216	210-0805-00	XB333239		1		WASHER,FLAT:0.204 ID X 0.438 INCH OD,STL	12327	OBD
-217	166-0457-00	XB333239		1		INSUL SLVG,ELEC:0.19 ID X 1.875"LONG MYLAR	80009	166-0457-00
						- - - * - - -		
-218	407-0921-00			1		BRACKET,XFMR:ALUMINUM	80009	407-0921-00
						(ATTACHING PARTS)		
-219	212-0023-00			2		SCREW,MACHINE:8-32 X 0.375 INCH,PNH STL	83385	OBD
-220	210-0804-00	XB020734		2		WASHER,FLAT:0.17 ID X 0.375 INCH OD,STL	12327	OBD
						- - - * - - -		
-221	----- -----			1		SW,THERMOSTATIC:(SEE S1000 EPL)		
						(ATTACHING PARTS)		
-222	211-0008-00			2		SCREW,MACHINE:4-40 X 0.25 INCH,PNH STL	83385	OBD
-223	210-0586-00			2		NUT,PLAIN,EXT W:4-40 X 0.25 INCH,STL	78189	211-041800-00
						- - - * - - -		
-224	441-0993-01			1		CHASSIS,SCOPE:POWER SUPPLY	80009	441-0993-01
						(ATTACHING PARTS)		
-225	212-0004-00			5		SCREW,MACHINE:8-32 X 0.312 INCH,PNH STL	83385	OBD
						- - - * - - -		
-226	----- -----			1		FAN,AXIAL:(SEE B1001 EPL)		
						(ATTACHING PARTS)		
-227	210-0457-00			4		NUT,PLAIN,EXT W:6-32 X 0.312 INCH,STL	83385	OBD
						- - - * - - -		
-228	386-2410-00	B010100	B070712	1		SUBPANEL,REAR:	80009	386-2410-00
	386-2410-01	B070713		1		SUBPANEL,REAR:	80009	386-2410-01
						(ATTACHING PARTS)		
-229	211-0541-00			2		SCREW,MACHINE:6-32 X 0.25"100 DEG,FLH STL	83385	OBD
-230	213-0088-00			1		SCR,TPG,THD CTG:4-24 X 0.25 INCH,PNH STL	83385	OBD
-231	211-0504-00			2		SCREW,MACHINE:6-32 X 0.25 INCH,PNH STL	83385	OBD
						- - - * - - -		
-232	255-0334-00			FT		PLASTIC CHANNEL:12.75 X 0.175X 0.155,NYL	11897	122-37-2500
-233	----- -----			1		CKT BOARD ASSY:SIGNALS OUT(SEE A7 EPL)		
-234	131-0608-00			10		. TERMINAL,PIN:0.365 L X 0.25 PH,BRZ,GOLD PL	22526	47357
-235	131-1003-00			2		. CONNECTOR BODY,:CKT BD MT,2 PRONG	80009	131-1003-00
-236	136-0252-04	B010100	B161209	27		. SOCKET,PIN TERM:0.188 INCH LONG	22526	75060-007
	136-0350-00	B161210	B365764	9		. SOCKET,PLUG-IN:3 PIN,LOW PROFILE	80009	136-0350-00
	136-0252-04	B365765		27		. SOCKET,PIN TERM:0.188 INCH LONG	22526	75060-007
	136-0252-01			2		. CONTACT,ELEC:0.178 INCH LONG	00779	1-332095-2
-237	214-0579-00			1		. TERM.,TEST PT:BRS CD PL	80009	214-0579-00
-238	260-0984-00			1		. SWITCH,SLIDE:DP 3 POSN,0.5A,125VAC-DC	79727	G-128-S-0012
						(ATTACHING PARTS FOR CKT BD)		
-239	211-0008-00			2		SCREW,MACHINE:4-40 X 0.25 INCH,PNH STL	83385	OBD
						- - - * - - -		
-240	131-0955-00			6		CONNECTOR,RCPT,:BNC,FEMALE,W/HARDWARE	13511	31-279
						(ATTACHING PARTS FOR EACH)		
-241	210-0255-00			1		TERMINAL,LUG:0.391" ID INT TOOTH	80009	210-0255-00
						- - - * - - -		
-242	385-0149-00	B010100	B365126X	1		SPACER,POST:0.625 L W/4-40 THD EA END,NYL	80009	385-0149-00
						(ATTACHING PARTS)		
-243	211-0008-00			1		SCREW,MACHINE:4-40 X 0.25 INCH,PNH STL	83385	OBD
						- - - * - - -		
-244	210-0201-00	B010100	B365126X	1		TERMINAL,LUG:SE #4	86928	A373-157-2
						(ATTACHING PARTS)		
-245	211-0008-00			1		SCREW,MACHINE:4-40 X 0.25 INCH,PNH STL	83385	OBD
						- - - * - - -		
-246	210-0202-00	B010100	B282244	1		TERMINAL,LUG:0.146 ID,LOCKING,BRZ TINNED	78189	2104-06-00-2520N
	210-0202-00	B282245		2		TERMINAL,LUG:0.146 ID,LOCKING,BRZ TINNED	78189	2104-06-00-2520N
						(ATTACHING PARTS)		
-247	211-0504-00	B010100	B282244	1		SCREW,MACHINE:6-32 X 0.25 INCH,PNH STL	83385	OBD
	211-0507-00	B282245		2		SCREW,MACHINE:6-32 X 0.312 INCH,PNH STL	83385	OBD

Fig. & Index No.	Tektronix Part No.	Serial/Model No. Eff	Dscont	Qty	1 2 3 4 5	Name & Description	Mfr Code	Mfr Part Number
4-248	210-0407-00	B010100	B282244	1		NUT,PLAIN,HEX.:6-32 X 0.25 INCH,BRS	73743	3038-0228-402
	210-0407-00	B282245		2		NUT,PLAIN,HEX.:6-32 X 0.25 INCH,BRS	73743	3038-0228-402
						- - - * - - -		
-249	352-0076-00			1		FUSEHOLDER:W/HARDWARE	75915	342012-L
-250	210-0873-00			1		WASHER,NONMETAL:0.5 ID X 0.688 INCH OD,NPRN	70485	OBD
-251	200-1388-00	B010100	B282279	1		COVER,FUSE LEAD:	80009	200-1388-00
	200-1388-01	B282280		1		COVER,FUSE:	80009	200-1388-01
-252	358-0025-00	B010100	B070712	1		BSHG,STRAIN RLF:	28520	SR-6P-4
	358-0161-00	B070713		1		BSHG,STRAIN RLF:FOR 0.50 INCH HOLE,PLASTIC	28520	SR5P4
-253	378-0041-01			1		FILTER ELEM,AIR:	80009	378-0041-01
-254	346-0077-00			1		STRAP,TIEDOWN E:6.225 INCH L	80009	346-0077-00
-255	161-0033-09			1		CABLE ASSY,PWR,:3 WIRE,92 INCH LONG	80009	161-0033-09
-256	162-0512-00	XB322900		FT		INS SLV,ELEC:#10 YELLOW,0.104 FEET LONG	80009	162-0512-00
-257	386-2401-00	B010100	B070712	1		PANEL,REAR:	80009	386-2401-00
	386-2401-02	B070713		1		PANEL,REAR:	80009	386-2401-02
						(ATTACHING PARTS)		
-258	211-0008-00	B010100	B070712	8		SCREW,MACHINE:4-40 X 0.25 INCH,PNH STL	83385	OBD
-259	211-0504-00	B070713		4		SCREW,MACHINE:6-32 X 0.25 INCH,PNH STL	83385	OBD
						- - - * - - -		
-260	131-0707-00	B010100	B282304	324		CONNECTOR,TERM.:22-26 AWG,BRS& CU BE GOLD	22526	47439
	131-0707-00	B282305		322		CONNECTOR,TERM.:22-26 AWG,BRS& CU BE GOLD	22526	47439
	131-0708-00			14		CONTACT,ELEC:0.48"L,28-32 AWG WIRE	22526	47437
-261	352-0171-00			5		HLDR,TERM CONN:1 WIRE BLACK	80009	352-0171-00
-262	352-0169-00	B010100	B282304	2		HLDR,TERM CONN:2 WIRE BLACK	80009	352-0169-00
	352-0169-00	B282305		1		HLDR,TERM CONN:2 WIRE BLACK	80009	352-0169-00
	352-0169-01			4		CONN BODY,PL,EL:2 WIRE BROWN	80009	352-0169-01
	352-0169-04			2		CONN BODY,PL,EL:2 WIRE YELLOW	80009	352-0169-04
	352-0169-08			4		CONN BODY,PL,EL:2 WIRE GRAY	80009	352-0169-08
	352-0169-09			1		CONN BODY,PL,EL:2 WIRE WHITE	80009	352-0169-09
-263	352-0161-00			2		HLDR,TERM CONN:3 WIRE BLACK	80009	352-0161-00
	352-0161-02			1		CONN BODY,PL,EL:3 WIRE RED	80009	352-0161-02
	352-0161-03			2		CONN BODY,PL,EL:3 WIRE ORANGE	80009	352-0161-03
	352-0161-04			2		CONN BODY,PL,EL:3 WIRE YELLOW	80009	352-0161-04
	352-0161-07			3		CONN BODY,PL,EL:3 WIRE VIOLET	80009	352-0161-07
	352-0161-08			2		CONN BODY,PL,EL:3 WIRE GRAY	80009	352-0161-08
-264	352-0162-01			4		CONN BODY,PL,EL:4 WIRE BROWN	80009	352-0162-01
	352-0162-05			1		CONN BODY,PL,EL:4 WIRE GREEN	80009	352-0162-05
	352-0162-09			1		CONN BODY,PL,EL:4 WIRE WHITE	80009	352-0162-09
-265	352-0163-00			1		CONN BODY,PL,EL:5 WIRE BLACK	80009	352-0163-00
	352-0163-01			2		CONN BODY,PL,EL:5 WIRE BROWN	80009	352-0163-01
	352-0163-06			2		CONN BODY,PL,EL:5 WIRE BLUE	80009	352-0163-06
	352-0163-08			2		CONN BODY,PL,EL:5 WIRE GRAY	80009	352-0163-08
-266	352-0164-01			2		CONN BODY,PL,EL:6 WIRE BROWN	80009	352-0164-01
	352-0164-05			1		CONN BODY,PL,EL:6 WIRE GREEN	80009	352-0164-05
	352-0164-09			1		CONN BODY,PL,EL:6 WIRE WHITE	80009	352-0164-09
-267	352-0165-00			2		CONN BODY,PL,EL:7 WIRE BLACK	80009	352-0165-00
-268	352-0166-00			4		CONN BODY,PL,EL:8 WIRE BLACK	80009	352-0166-00
	352-0166-01			3		CONN BODY,PL,EL:8 WIRE BROWN	80009	352-0166-01
	352-0166-02			3		CONN BODY,PL,EL:8 WIRE RED	80009	352-0166-02
	352-0166-03			2		CONN BODY,PL,EL:8 WIRE ORANGE	80009	352-0166-03
-269	352-0167-00			2		HLDR,TERM CONN:9 WIRE BLACK	80009	352-0167-00
-270	352-0168-00			2		CONN BODY,PL,EL:10 WIRE BLACK	80009	352-0168-00
	352-0168-02			2		CONN BODY,PL,EL:10 WIRE RED	80009	352-0168-02
	352-0168-05			2		CONN BODY,PL,EL:10 WIRE GREEN	80009	352-0168-05
	352-0168-07			2		CONN BODY,PL,EL:10 WIRE VIOLET	80009	352-0168-07
-271	210-0775-00			9		EYELET,METALLIC:0.126 OD X 0.23 INCH L,BRS	80009	210-0775-00
-272	210-0774-00			9		EYELET,METALLIC:0.152 OD X 0.245 INCH L,BRS	80009	210-0774-00
-273	200-1075-00			4		COVER,ELEC CONN:PLASTIC	00779	1-480435-0
-274	131-0861-00			4		TERM,QIK DISC:16-20 AWG,0.22 W X 0.02 THK	00779	42617-2
-275	179-1828-00			1		WIRING HARNESS,:RESET	80009	179-1828-00
	131-0707-00			2		. CONNECTOR,TERM.:22-26 AWG,BRS& CU BE GOLD	22526	47439
	131-0708-00			2		. CONTACT,ELEC:0.48"L,28-32 AWG WIRE	22526	47437
	352-0169-05			1		. CONN BODY,PL,EL:2 WIRE GREEN	80009	352-0169-05

Fig. & Index No.	Tektronix Part No.	Serial/Model No. Eff	Dscont	Qty	1 2 3 4 5	Name & Description	Mfr Code	Mfr Part Number
4-	352-0169-09			1		. CONN BODY,PL,EL:2 WIRE WHITE	80009	352-0169-09
	179-1825-00			1		WIRING HARNESS,:VERTICAL SIGNAL	80009	179-1825-00
	131-0707-00			3		. CONNECTOR,TERM.:22-26 AWG,BRS& CU BE GOLD	22526	47439
	131-0708-00			1		. CONTACT,ELEC:0.48"L,28-32 AWG WIRE	22526	47437
	352-0162-00			1		. HLDR,TERM CONN:4 WIRE BLACK	80009	352-0162-00
	210-0775-00			2		. EYELET,METALLIC:0.126 OD X 0.23 INCH L,BRS	80009	210-0775-00
	210-0774-00			2		. EYELET,METALLIC:0.152 OD X 0.245 INCH L,BRS	80009	210-0774-00
	179-1826-00			1		WIRING HARNESS,:SWEEP GATE	80009	179-1826-00
	131-0707-00			8		. CONNECTOR,TERM.:22-26 AWG,BRS& CU BE GOLD	22526	47439
	131-0708-00			8		. CONTACT,ELEC:0.48"L,28-32 AWG WIRE	22526	47437
	352-0166-03			2		. CONN BODY,PL,EL:8 WIRE ORANGE	80009	352-0166-03
-276	175-0825-00			FT		WIRE,ELECTRICAL:2 WIRE RIBBON	80009	175-0825-00
-277	175-0826-00			FT		WIRE,ELECTRICAL:3 WIRE RIBBON	80009	175-0826-00
-278	175-0827-00			FT		WIRE,ELECTRICAL:4 WIRE RIBBON	08261	SS-0426-710610C
-279	175-0828-00			FT		WIRE,ELECTRICAL:5 WIRE RIBBON	08261	OBD
-280	175-0829-00			FT		WIRE,ELECTRICAL:6 WIRE RIBBON	08261	SS-0626-710610C
-281	175-0830-00			FT		WIRE,ELECTRICAL:7 WIRE RIBBON	08261	SS-0726-710610C
-282	175-0831-00			FT		WIRE,ELECTRICAL:8 WIRE RIBBON	08261	OBD
-283	175-0833-00			FT		WIRE,ELECTRICAL:10 WIRE RIBBON	08261	OBD
	175-0855-00			FT		WIRE,ELECTRICAL:10 WIRE RIBBON	08261	SS-1022(1061)0C

7613 ACCESSORIES

Fig. & Index No.	Tektronix Part No.	Serial/Model No. Eff	Dscont	Qty 1 2 3 4 5	Name & Description	Mfr Code	Mfr Part Number
					7613 ACCESSORIES		
-1	175-1178-00			1	CABLE,SP ELECT:	80009	175-1178-00
-2	378-0625-08			1	FILTER,LT,CRT GREEN	80009	378-0625-08
	070-1365-00			1	MANUAL,TECH:OPERATORS	80009	070-1365-00
	070-1463-01			1	MANUAL,TECH:INSTRUCTION	80009	070-1463-01

R7613 ACCESSORIES

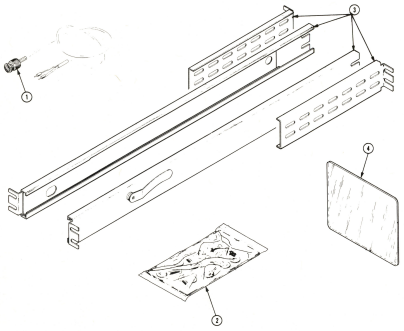

Fig. & Index No.	Tektronix Part No.	Serial/Model No. Eff	Dscont	Qty 1 2 3 4 5	Name & Description	Mfr Code	Mfr Part Number
					R7613 ACCESSORIES		
-1	175-1178-00			1	CABLE,SP ELECT:	80009	175-1178-00
-2	016-0099-00			1	HDW KIT,ELEK EQ:RACKMOUNTING HARDWARE	80009	016-0099-00
-3	351-0314-00			1	SLIDE GUIDE,RK:LEFT AND RIGHT	80009	351-0314-00
-4	378-0625-08			1	FILTER,LT,CRT:GREEN	80009	378-0625-08
	070-1365-00			1	MANUAL,TECH:OPERATORS	80009	070-1365-00
	070-1463-01			1	MANUAL,TECH:INSTRUCTION	80009	070-1463-01

REPLACEABLE PARTS FOR FACTORY INSTALLED OPTIONS

OPTION 7
Without Signals Out

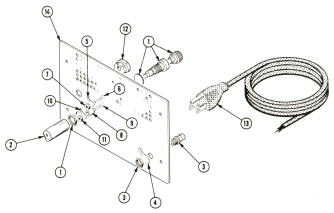

Fig. & Index No.	Tektronix Part No.	Serial/Model No. Eff	Serial/Model No. Dscont	Qty 1 2 3 4 5	Name & Description	Mfr Code	Mfr Part Number
					OPTION 7		
-1	352-0076-00			1	FUSEHOLDER:W/HARDWARE	75915	342012
-2	200-0237-00			1	INS HOOD,INS:FUSEHOLDER	80009	200-0237-00
-3	131-0953-00			1	CONNECTOR,RCPT,:BNC,FEMALE,W/HARDWARE	05091	31-279
					(ATTACHING PARTS)		
-4	210-0255-00			1	TERMINAL,LUG:0.391" ID INT TOOTH - - - * - - -	80009	210-0255-00
-5	210-0202-00			1	TERMINAL,LUG:SE #6	78189	2104-06-00-2520N
					(ATTACHING PARTS)		
-6	211-0504-00			1	SCREW,MACHINE:6-32 X 0.25 INCH,PNH STL	83385	OBD
-7	210-0407-00			1	NUT,PLAIN,HEX.:6-32 X 0.25 INCH,BRS - - - * - - -	73743	3038-0228-402
-8	385-0100-00			1	INS,STANDOFF:0.312 INCH X 0.50 INCH LONG	80009	385-0100-00
					(ATTACHING PARTS)		
-9	211-0504-00			1	SCREW,MACHINE:6-32 X 0.25 INCH,PNH STL	83385	OBD
-10	210-0202-00			1	TERMINAL,LUG:SE #6	78189	2104-06-00-2520N
-11	210-0407-00			1	NUT,PLAIN,HEX.:6-32 X 0.25 INCH,BRS - - - * - - -	73743	3038-0228-402
-12	358-0323-00			1	BSHG,STRAIN RLF:90 DEG,0.515 DIA HOLE	28520	5815-1
-13	161-0033-09			1	CABLE ASSY,PWR,:3 WIRE,92 INCH LONG	80009	161-0033-09
-14	386-2329-00			1	PANEL,REAR:	80009	386-2329-00

OPTION 3
Electromagnetic Interference (EMI)

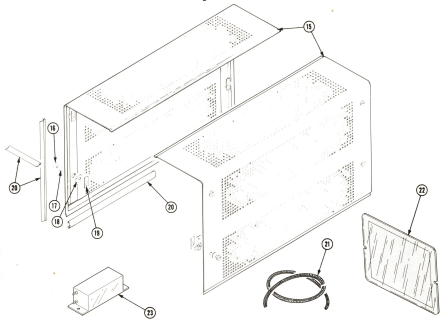

Fig. & Index No.	Tektronix Part No.	Serial/Model No. Eff	Serial/Model No. Dscont	Qty 1 2 3 4 5	Name & Description	Mfr Code	Mfr Part Number
					OPTION 3		
	390-0346-00			2	CABINET SIDE:RIGHT LEFT	80009	390-0346-00
-15	214-0816-00			6	. LATCH ASSEMBLY:	80009	214-0816-00
	214-0603-01			1	. . PIN,SECURING:0.27 INCH LONG	80009	214-0603-01
-16	214-0604-00			1	. . WASH.,SPG THRN:0.26 ID X 0.47 INCH OD	80009	214-0604-00
-17	386-0227-00			1	. . PL,LATCH INDEX:	80009	386-0227-00
-18	386-1151-00			1	. . PLATE,LATCH LKG:	80009	386-1151-00
-19	348-0274-00			4	. SHLD GSKT,ELEC:	80009	348-0274-00
-20	348-0234-00			1	SHLD GSKT,ELECT:39.5 INCHES LONG	80009	348-0234-00
-21	378-0696-00			1	FILTER,LY,CNT:AMBER	80009	378-0696-00
-22	119-0113-05			1	FILTER,RAD INTE:250 VAC 400 HZ	72982	9604-000-9000
-23	390-0355-00			1	CABINET BOTTOM:	80009	390-0355-00
					OPTIONAL ACCESSORY		
	016-0155-00			1	PLUG-IN PANEL:BLANK	80009	016-0155-00

7613 OPTION 5

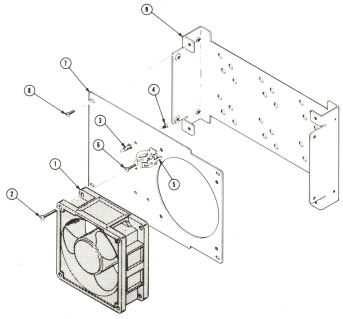

Fig. & Index No.	Tektronix Part No.	Serial/Model No. Eff	Dscont	Qty	1 2 3 4 5	Name & Description	Mfr Code	Mfr Part Number
-1	----- -----			1		FAN,TUBE AXIAL:50-400HZ,115V,AC(SEE B1001 EPL)		
						(ATTACHING PARTS)		
-2	211-0530-00			4		SCREW,MACHINE:6-32 X 1.75 INCH,PNH STL	83385	OBD
						- - - * - - -		
-3	131-0761-00			3		TERMINAL STUD:SCREW MTD,FLAT TAB	71279	4897-1-0516
						(ATTACHING PARTS FOR EACH)		
-4	211-0504-00			1		SCREW,MACHINE:6-32 X 0.25 INCH,PNH STL	83385	OBD
						- - - * - - -		
-5	344-0116-00			1		MTNR,CAPACITOR:	TK-17	90210
						(ATTACHING PARTS)		
-6	211-0008-00			1		SCREW,MACHINE:4-40 X 0.25 INCH,PNH STL	83385	OBD
						- - - * - - -		
-7	378-0050-00			1		BAFFLE,AIR:	80009	378-0050-00
						(ATTACHING PARTS)		
-8	211-0507-00			4		SCREW,MACHINE:6-32 X 0.312 INCH,PNH STL	83385	OBD
						- - - * - - -		
-9	441-1201-00			1		CHAS,ELEC EQPT:	80009	441-1201-00

R7613 OPTION 5

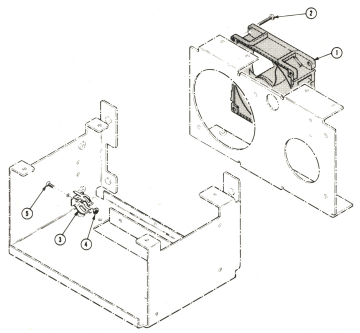

Fig. & Index No.	Tektronix Part No.	Serial/Model No. Eff	Dscont	Qty	1 2 3 4 5	Name & Description	Mfr Code	Mfr Part Number
-1	----- -----			1		FAN,TUBE AXIAL:50-400HZ,115V,AC(SEE B1001 EPL)		
						(ATTACHING PARTS)		
-2	211-0530-00			4		SCREW,MACHINE:6-32 X 1.75 INCH,PNH STL	83385	OBD
						- - - * - - -		
-3	344-0116-00			1		TRMT,CAPACITOR:	TK-17	90210
						(ATTACHING PARTS)		
-4	210-0407-00			1		NUT,PLAIN,HEX:6-32 X 0.25 INCH,BRS	73743	3038-0228-402
-5	211-0541-00			1		SCREW,MACHINE:6-32 X 0.25 INCH,100 DEG,FLH STL	83385	OBD
						- - - * - - -		

MANUAL CHANGE INFORMATION

At Tektronix, we continually strive to keep up with latest electronic developments by adding circuit and component improvements to our instruments as soon as they are developed and tested.

Sometimes, due to printing and shipping requirements, we can't get these changes immediately into printed manuals. Hence, your manual may contain new change information on following pages.

A single change may affect several sections. Since the change information sheets are carried in the manual until all changes are permanently entered, some duplication may occur. If no such change pages appear following this page, your manual is correct as printed.

SERVICE NOTE

Because of the universal parts procurement problem, some electrical parts in your instrument may be different from those described in the Replaceable Electrical Parts List. The parts used will in no way alter or compromise the performance or reliability of this instrument. They are installed when necessary to ensure prompt delivery to the customer. Order replacement parts from the Replaceable Electrical Parts List.

CALIBRATION TEST EQUIPMENT REPLACEMENT

Calibration Test Equipment Chart

This chart compares TM 500 product performance to that of older Tektronix equipment. Only those characteristics where significant specification differences occur, are listed. In some cases the new instrument may not be a total functional replacement. Additional support instrumentation may be needed or a change in calibration procedure may be necessary.

Comparison of Main Characteristics

DM 501 replaces 7D13		
PG 501 replaces 107	PG 501 - Risetime less than 3.5 ns into 50 Ω.	107 - Risetime less than 3.0 ns into 50 Ω.
108	PG 501 - 5 V output pulse; 3.5 ns Risetime	108 - 10 V output pulse 1 ns Risetime
PG 502 replaces 107		
108	PG 502 - 5 V output	108 - 10 V output
111	PG 502 - Risetime less than 1 ns; 10 ns Pretrigger pulse delay	111 - Risetime 0.5 ns; 30 to 250 ns Pretrigger pulse delay
PG 508 replaces 114	Performance of replacement equipment is the same or better than equipment being replaced.	
115		
2101		
PG 506 replaces 106	PG 506 - Positive-going trigger output signal at least 1 V; High Amplitude output, 60 V.	106 - Positive and Negative-going trigger output signal, 50 ns and 1 V; High Amplitude output, 100 V.
067-0502-01	PG 506 - Does not have chopped feature.	0502-01 - Comparator output can be alternately chopped to a reference voltage.
SG 503 replaces 190, 190A, 190B	SG 503 - Amplitude range 5 mV to 5.5 V p-p.	190B - Amplitude range 40 mV to 10 V p-p.
191		
067-0532-01	SG 503 - Frequency range 250 kHz to 250 MHz.	0532-01 - Frequency range 65 MHz to 500 MHz.
SG 504 replaces 067-0532-01	SG 504 - Frequency range 245 MHz to 1050 MHz.	0532-01 - Frequency range 65 MHz to 500 MHz.
067-0650-00		
TG 501 replaces 180, 180A	TG 501 - Trigger output-slaved to marker output from 5 sec through 100 ns. One time-mark can be generated at a time.	180A - Trigger pulses 1, 10, 100 Hz; 1, 10, and 100 kHz. Multiple time-marks can be generated simultaneously.
181		181 - Multiple time-marks
184	TG 501 - Trigger output-slaved to market output from 5 sec through 100 ns. One time-mark can be generated at a time.	184 - Separate trigger pulses of 1 and 0.1 sec; 10, 1, and 0.1 ms; 10 and 1 μs.
2901	TG 501 - Trigger output-slaved to marker output from 5 sec through 100 ns. One time-mark can be generated at a time.	2901 - Separate trigger pulses, from 5 sec to 0.1 μs. Multiple time-marks can be generated simultaneously.

NOTE: All TM 500 generator outputs are short-proof. All TM 500 plug-in instruments require TM 500-Series Power Module.